Group Decision-making Techniques for Natural Resource Management Applications

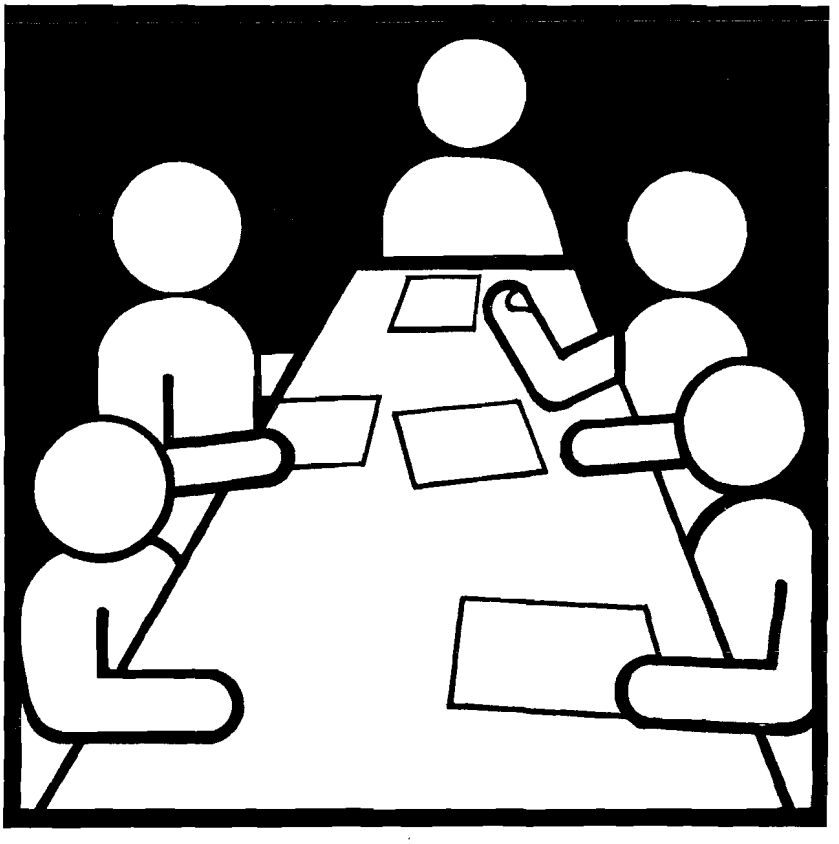

UNITED STATES DEPARTMENT OF THE INTERIOR
Fish and Wildlife Service / *Resource Publication* 185

Technical Report Series

U.S. Fish and Wildlife Service

The Fish and Wildlife Service publishes five technical report series. Manuscripts are accepted from Service employees or contractors, students or faculty associated with cooperative research units, and other persons whose work is sponsored by the Service. Manuscripts are received with the understanding that they are unpublished. Most manuscripts receive anonymous peer review. The final decision to publish lies with the editor.

Editorial Staff

MANAGING EDITOR
Paul A. Opler

WILDLIFE EDITOR
Elizabeth D. Rockwell

FISHERIES EDITOR
James R. Zuboy

PUBLICATIONS MANAGEMENT
Thomas J. Cortese

TECHNICAL EDITORS
Deborah K. Harris, Senior Editor
Jamise G. Liddell
John S. Ramsey

VISUAL INFORMATION SPECIALIST
Constance M. Lemos

EDITORIAL ASSISTANT
Amy D. Trujillo

Series Descriptions

North American Fauna
Monographs of long-term or basic research on faunal and floral life histories, distributions, population dynamics, and taxonomy, and on community ecology.

Fish and Wildlife Research
Scientific papers of scholarly quality on original research, theoretical presentations, and interpretive literature reviews.

Biological Report
Technical papers about applied research of a more limited scope than papers in *Fish and Wildlife Research*. Subjects include new information arising from more comprehensive studies, surveys and inventories, effects of land use on fish and wildlife, diseases of fish and wildlife, animal control, and developments in technology. Proceedings of technical conferences and symposia may be published in this series.

Resource Publication
Semitechnical and nonexperimental technical topics including surveys; data, status and historical reports; handbooks; checklists; manuals; annotated bibliographies; and workshop papers.

Fish and Wildlife Leaflet
Summaries of technical information for readers of nontechnical or semitechnical materials. Subjects include topics of current interest, results of inventories and surveys, management techniques, and descriptions of imported fishes and wildlife and their diseases.

Copies of this publication may be obtained from the Publications Unit, U.S. Fish and Wildlife Service, 1849 C Street, N.W., Arlington Square Building, Mail Stop 130, Washington, DC 20240, or may be purchased from the National Technical Information Service (NTIS), 5285 Port Royal Road, Springfield, VA 22161, (Call Toll Free 1-800-553-6847).

ISSN 0163-4801

Group Decision-making Techniques for Natural Resource Management Applications

By Beth A. K. Coughlan
Carl L. Armour

U.S. DEPARTMENT OF THE INTERIOR
FISH AND WILDLIFE SERVICE
Resource Publication 185
Washington, D.C. 20240 • 1992

Contents

	Page
Preface	iii
Part 1: Group Problem Solving	1
The Problems of Group Decision Making	1
General Strategies for Improving Group Decision Making	4
Part 2: Decision Analysis Techniques	13
Problem Identification	16
Problem Analysis	20
Defining Goals and Objectives	26
Identification of Alternative Solutions	29
Evaluation of Alternatives	34
Developing a Management Plan	39
Implementation	45
Monitoring and Evaluation	45
Special Considerations for Experts	48
Acknowledgments	53
References	54

Preface

This report is an introduction to decision analysis and problem-solving techniques for professionals in natural resource management. Although these managers are often called upon to make complex decisions, their training in the natural sciences seldom provides exposure to the decision-making tools developed in management science. Our purpose is to begin to fill this gap. We present a general analysis of the pitfalls of group problem solving, and suggestions for improved interactions followed by the specific techniques. Selected techniques are illustrated. The material is easy to understand and apply without previous training or excessive study and is applicable to natural resource management issues.

Group Decision-making Techniques for Natural Resource Management Applications

By

Beth A. K. Coughlan

TGS Technology
P.O. Box 9076
Fort Collins, Colorado 80526

and

Carl L. Armour

National Ecology Research Center
U.S. Fish and Wildlife Service
4512 McMurry Avenue
Fort Collins, Colorado 80525

Part 1: Group Problem Solving

The Problems of Group Decision Making

We provide an overview of group decision-making techniques developed in the decision analysis field. The literature relating to group decision making is extensive, ranging from group psychology to quantitative methods. We present only some of the most helpful and easily applied information that may be useful to scientists as natural resource decision makers. Scientists are often involved in interdisciplinary decision-making groups, but are rarely trained for these roles. Many of the environmental problems faced by such groups are complex, and combined with the interpersonal conflict common to many group interactions make reaching an agreement difficult. An unfortunate result is that recommendations are often made that cannot be adequately defended.

We describe some of the pitfalls confronting decision-making groups, and we present some techniques to structure and improve the group problem-solving process. Awareness and use of these methods should improve the quality of environmental decisions and reduce the frustration of persons involved in decision making.

In most organizations, complex or risky decisions are typically handled by groups. Groups offer many advantages over individual problem solving, and the quality of decisions made by groups is generally considered better. Hegedus and Rasmussen (1986) reported on studies comparing groups and individuals solving a standard problem. These studies indicated the performance of a group is better than the effort of its best individual when a structured process is followed. Some of the factors contributing to the improved performance are that groups stimulate thinking; members have the opportunity to elaborate on each other's ideas and suggest new solutions; there is participation of professionals in several different fields, usually required to address important aspects of a problem; a deeper understanding of the problem is reached as different perspectives are shared; and

there is improvement in the ability to eliminate biases and oversights that could weaken the rationale for a decision.

Despite obvious advantages of group decision making, groups rarely live up to their potential because of the inherent problems encountered. One problem involves pressures that arise when people work closely together, especially when they are subject to stresses that create a strong need for psychological support. A second is that problem solving in groups tends to become subverted by tangential discussion, avoidance of the task, and the social concerns and relations of the members. A third problem is that because the hierarchy established between members is the dominant operating structure, high status and strong personalities typically dominate interactions. A fourth problem is that discussions become narrowly focused, and there can be avoidance of new ideas so only a few noncontroversial alternatives are considered. Finally, because independent ideas and critical thinking are not scrutinized by rigorous methods, fast decisions can occur before reaching a clear understanding of the problem and the implications of the proposed solution (Delbecq et al. 1975).

Janis (1972) documented faulty group decisions that led to fiascos, including the lack of preparation for the attack on Pearl Harbor, the invasion of North Korea during the Korean war, the Bay of Pigs invasion, and the escalation of the Vietnam war. In these cases, Janis found an enormous gap between good intentions and unjustifiable practices of the decision-making groups. Decision makers involved with the fiascos were overly optimistic, unresponsive to warnings from outsiders, and held an illusion of invulnerability. Information from outside the decision-making group, such as the warnings and criticism of experts, was discounted as untrustworthy and irrelevant. Janis concluded that even the most qualified and rational experts can be caught up in irrational decision making because the subtle constraints in a group can prevent a member from fully exercising critical thinking and expressing doubts when others appear to have reached a consensus.

The dynamics that cause a group to stray from reaching a rational decision come into play as cohesiveness and esprit de corps increases. Some cohesiveness is needed for individuals to work together and commit to solving the problem; however, the more cohesive the group the greater the power to bring about conformity. Participation in the group becomes more significant to the security and self-esteem of the members than solving the problem. Nonconformists tend to be rejected outright, although the pressure to go along with the group can be much more subtle and internalized. In a cohesive group, members sense their acceptance and feel more freedom to disagree and to examine controversial information. They are more receptive to new and contradictory information and are more tolerant of disagreements within the group. The desire for genuine consensus, however, inclines members not to exercise this freedom. Members may censor their own thoughts and comments to avoid the possible negative reactions of others, or because they think the views expressed by the group are somehow more valid than their own. This mode of thinking is known as groupthink. Eight symptoms characteristic of groups caught up in groupthink (Janis 1972) are as follows:

1. the illusion of invulnerability, shared by most or all members, which produces excessive optimism and encourages taking extreme risks;
2. collective efforts to rationalize and discount warnings that might lead members to reconsider their assumptions before committing to policy decisions;
3. unquestioned belief in the group's inherent morality, inclining members to ignore ethical or moral consequences of their decisions;
4. stereotyped views of enemy groups as too evil to warrant negotiation, or too weak and stupid to counter whatever risky attempts are made to defeat their purposes;
5. direct pressure on any member who expresses strong arguments against the group's stereotypes, illusions, or commitments, making it clear that this type of dissent is contrary to what is expected of loyal members;
6. self-censorship of deviations from the apparent consensus, each member inclined to personally minimize the importance of doubts and counter arguments;
7. a shared illusion of unanimity, from equating self-censorship and silence with consent; and
8. the emergence of mind guards who protect the group from adverse information that might

shatter the shared complacency about the effectiveness and morality of their decisions.

The presence of all or most of these symptoms indicates that the decision-making process is probably dominated by groupthink, and the group is unlikely to accomplish its goals. Group cohesiveness is necessary for groupthink, but it alone is not a sufficient condition. Insulation of the group from criticism and opposing views and ineffective leadership are also key components. A leader who promotes a particular solution, and does not possess good listening and clarifying skills, encourage and support honest participation by all members, and create and manage constructive conflict, makes a large contribution to the groupthink process (Brightman 1988). The danger of groupthink is not that members will fail to raise their objections to the favored proposal, but rather that they will agree with it and not conduct a critical evaluation to reveal weaknesses that would arouse strong objections. They behave this way because emphasis is on conformity and group cohesiveness, not on finding the best solution to the problem.

One perspective on the perils of conformity was dubbed the Abilene paradox by Harvey (1974) after he and several family members drove to Abilene, Texas, for dinner through unbearable 41° C heat in the midst of a dust storm. No one actually wanted to go, yet all had agreed to take the trip because each had the impression that everyone else wanted to go. This incident is an example of the illusion of consensus that Harvey contends is the most pressing issue facing organizations. The result of this commonly occurring illusion of agreement is that organizations compound their problems, rather than solve them, by taking actions that contradict the available data.

This paradox of group behavior also has recognizable symptoms. Individually and privately, group members agree about the nature of the problem and the steps required to cope with the situation; however, they fail to accurately communicate their views. In fact, they do just the opposite, leading each other to misperceive the true consensus of the group. Based on invalid and inaccurate information, group members make collective decisions that are contrary to what they actually want to do. It is no surprise that the results are contrary to the group's actual intent. Frustration, anger, irritation, and dissatisfaction are experienced by members of the group as a result of pursuing counterproductive actions. Individuals and subgroups begin to blame each other or authority figures for the dilemma. Unfortunately, if corrective actions are not taken, the cycle is repeated with increasing intensity.

Although such a situation at first seems ridiculous, there is a rationale for such behavior. Harvey (1974) suggested that the individualism and mobility of our modern culture have created an atmosphere where the risk of separation and loneliness is overemphasized, and skills needed for successful social interaction are undeveloped. As a result, the risk of rejection for expressing controversial opinions is exaggerated, and less anxiety is produced by going along with a bad idea than by introducing controversy.

Groupthink and the Abilene paradox represent problems faced by cohesive groups that avoid conflict. Other groups, however, can experience too much conflict to be effective at problem solving. A noncohesive group can be consumed by bickering factions more intent on fighting for political power or expressing the views of their particular group than on constructively examining the issues at hand. Such a group may settle for a compromise without examining the effects of the decision outside the realm of the group's particular concern. Several other types of noncohesive groups include those characterized by superficial conformity out of fear of recrimination; rubber-stamp groups, whose sole purpose is to approve the opinions of the leader; and competitive groups with a win or lose stance among members. A balance between too little and too much conflict must be reached for problem-solving teams to function.

Too much or too little cohesiveness or ineffective use of conflict are major blocks to constructive problem solving; however, other explanations for the failure of groups to make effective decisions can be found. Group decisions are often more difficult than necessary because of one or more shortcomings (Watson 1976; Brightman 1988), such as

1. the statement of the problem and objectives is incomplete or incorrect;
2. only one alternative solution is designed, or different alternatives are actually clones;

3. alternatives rejected during initial deliberations are not reconsidered;
4. the needed expertise and information are not available;
5. assumptions are not identified and questioned;
6. the risks or difficulties associated with implementing the chosen alternative are not examined; and
7. a contingency plan is not developed.

These weaknesses in the group process are attributed to various causes (Napier and Gershenfeld 1985). Group exercises can result in frustration and a great waste of time and money if they are not conducted properly. Some people, especially those with negative group experiences, are skeptical of putting much value on decisions produced from group interactions. The commitment necessary for meaningful group participation may be difficult to obtain from such skeptics. The group also may be ineffective because members are not sure of their power or role. (e.g., Will they have the authority to actually make a decision? Are they advising someone else who will have the final say? Is the decision already made?) One particularly powerful or outspoken individual may dominate the discussions, inhibiting participation of other group members. The decisions of such a group may be more a reflection of one individual's views than of a group process. A lack of effective leadership also can lead to a loss of morale and enthusiasm, qualities originally meant to be fostered by increasing individual involvement.

Clearly, decision-making groups face a variety of obstacles. Because a group is likely to have problems making decisions, an awareness of some principles and methods to help improve the process is needed. Structured methods provide an organized way to state the objectives of the decision, obtain and organize data, identify feasible alternatives, and evaluate and quantify the consequences and uncertainty associated with alternative courses of action. A structured method allows group members to contribute their knowledge and talents in a constructive way and results in a better understanding of the problem.

The focus of a decision-making group is to find solutions to problems. Before we describe how to find such solutions, it is worthwhile to put the whole problem-solving process in perspective. Some have argued that individuals are too solution-oriented, when a true solution rarely exists (Meredith 1984). It is also common for time and efforts to be consumed by focusing on temporary solutions instead of lasting ones; the available information is often unclear and detracts from reaching a workable solution.

Several factors may make a technical, fact-oriented approach to problem solving difficult; however, the facts may not be as important to groups as the human aspects. For example, pleasing or appeasing certain individuals may be either an explicit or implied goal. Therefore, it is just as important to groups to define the problem in terms of interests of the people in them as it is to analyze the technical facts.

General Strategies for Improving Group Decision Making

Avoiding Groupthink

In spite of the many pitfalls that can obstruct problem-solving groups, assembling a group of people does not necessarily eliminate the possibility of rational decision making. However, a structured approach is needed to promote critical thinking and efficient use of members' skills and knowledge. Some type of format will help balance the social and personal needs of the individual members with the group requirement to accomplish the problem-solving task. Studies have compared the ability of structured and unstructured groups to complete a specific evaluation task (Hall 1971; Hegedus and Rasmussen 1986). Groups that used a structured process (i.e., nominal group technique) or had received group effectiveness training consistently outperformed groups that received less direction. In one study, half of the trained groups reached a solution that was an improvement on the best individual solution in that group (Hall 1971). General principles of interaction that can help improve group problem solving have been suggested by many authors (Hall 1971; Janis 1972; Harvey 1974; Adizes and Turban 1985; Tjosvold 1986; Heirs 1987; Brightman 1988; Zaremba 1988), including the following recurring themes.

Avoid directive leadership. A major fault of decision-making groups is trying to reach a consensus too early in the problem-solving process, a tendency fostered by the perception that the leader

has a preferred direction or outcome. Members then tend to follow the leader rather than provide different perspectives or conflicting information. The leader should not declare or intimate preferences or expectations for the group decision during the early stages of problem solving. A directive role is needed for matters of process, but the leader's input regarding the content of the decision should not be any more significant than the suggestions of other group members. Rather, the leader should develop an atmosphere of open inquiry, allowing the group to impartially explore a wide range of alternatives (Janis 1972).

One of the most important roles of the leader is to keep the meetings from degenerating into arguments, at the same time encouraging critical analysis by placing a high priority on raising objections, doubts, and disagreements. Group members need to be able to value each other's participation and not fear they will be blamed if their ideas turn out to be wrong. The leader must be specific about the members' responsibilities to the group. When the group members understand the process to be followed, the objectives of each step, and the contributions expected of them, they will be better prepared to contribute both ideas and criticisms freely. The level of participation tends to improve when expectations are clearly defined. Vague requests or instructions, however, must not be permitted to elicit active responses. Specific responsibilities to find additional information or to investigate the validity of assumptions or facts should be assigned to individuals as needed.

Another way to avoid the exaggerated influence of a leader is to assign the same issue to two or more groups or subgroups. In this approach, each group reaches a conclusion independently. The subgroups then reassemble to select the final solution, or another group or person is responsible for making the final selection.

Eliminate group isolation. One of the most serious symptoms of groupthink is the emergence of mind guards, group members who protect the group from external or conflicting views. To avoid this isolation and provide a broader perspective, Janis (1972) suggested inviting experts to appropriate sessions and encouraging them to challenge the views expressed in the group. Group members should also be encouraged to discuss the group deliberations with colleagues and report their reactions. Activities that expose the group to outside opinions help ensure that collective deception or an overly optimistic view is confronted with reality before a disaster occurs.

Involve all members. In Hall's (1971) study of problem-solving groups, the highest-scoring groups consistently tried to involve every member. The leader can promote participation by clearly expressing the need and expectation for open, creative thinking from everyone, but the entire group also must encourage this atmosphere. Limiting the size of the group or working in subgroups of four to seven people will help ensure an adequate opportunity for all members to express their views.

Create controversy. Ineffective groups often are either overcome by destructive competition and politics or avoid controversy altogether. Hall (1971) found that disagreements in established groups indicate the need for further discussion and play a valuable part in developing group integrity. Groups with high levels of internal conflict were more likely to collaborate and create unique solutions that improved on individual performances (Hall 1971). Compromise solutions reached by majority votes, however, can turn group results into an average of individual efforts rather than a true collaborative effort. Therefore, avoid compromise not based on sound judgment and critical analysis.

To encourage questioning of ideas and a better understanding of opposing positions, all members must be able and willing to express their doubts and objections. Members should avoid changing their positions just to avoid conflict. Including members from diverse backgrounds, yet committed to the group's purpose, can provide different perspectives. To provide for adequate debate, schedule sufficient time for meetings and for preparation of positions. Recognize opposing views and thank all members for their contributions.

One way to formally promote the consideration of conflicting views is to assign the role of devil's advocate to a different member at each meeting (Janis 1972; Herbert and Estes 1981; Brightman 1988). This person's sole task is to point out as many weaknesses as possible in the group's proposals. Similarly, assign subgroups to defend opposing views. In either situation, members can broaden their outlooks and gain an understanding of different perspectives by putting themselves in another position. These approaches allow members to pre-

sent conflicting positions or opinions they may be reluctant to express in unstructured discussions.

Use controversy constructively. The key to successful group problem solving is the ability to use controversy constructively. The group leader must encourage the healthy controversy needed for creative problem solving, yet avoid excessive competition that can destroy a group.

Brightman (1988) identified five styles dealing with conflict in terms of the cooperation and assertiveness expressed (Table 1). Collaboration, which is both cooperative and assertive, is his method of choice. Disagreements are openly confronted to define specific areas of conflict and agreement. Members listen carefully to each other and develop a proposal acceptable to all. The opposite of collaboration is the uncooperative and unassertive avoidance of conflict. Avoidance oriented members withdraw from group interaction to avoid generating conflict. Compromise is the conflict style between collaboration and avoidance. Compromising groups synthesize each person's ideas to find the middle ground; however, the best qualities of individual solutions may be lost. Competitive conflict is assertive but uncooperative. Members argue rather than discuss because they are only concerned about their own goals; someone must win and someone must lose. Accommodation is a conflict style in which members of the group are cooperative but unassertive; they are more concerned with maintaining group harmony than finding a good solution.

Success should be defined in terms of attaining the group goal, not individual performance. For the group to be successful, members must understand that effective performance means contributing to the group's exploration, not pushing individual positions (Tjosvold 1986). A clear understanding of the group's goals and expectations can help members present their ideas, listen to and value the opinions of others, and avoid arguing for their own positions. Differences of opinion are expected and helpful in reaching the group's goals, especially early in the problem-solving process. Searching for the best alternative acceptable to everyone will help avoid getting stuck in a win–lose situation.

Table 1. *Brightman's (1988) styles of reaction to conflict.*

Style	Cooperative	Assertive
Collaboration	Yes	Yes
Avoidance	No	No
Compromise	Somewhat	Somewhat
Competition	No	Yes
Accommodation	Yes	No

A certain degree of cohesiveness is needed to maintain an open, creative, and collaborative atmosphere. Trust, loyalty, and shared ambition are required to support problem-solving relations and to ensure that people are making an effort because they want to, rather than because they are told to. The best thinking occurs when people become absorbed in a problem and are motivated by true concern (Heirs 1987). Dealing constructively with controversy requires that all members possess a high level of competence in interpersonal skills. Criticism of ideas instead of people is needed, and disagreement must not be confused with personal rejection.

Individual Styles of Decision Making

Everyone has a personal style of making decisions. Some people interact with others a great deal. For those people, discussing the possibilities helps clarify how they feel. Other people mull over the information until they have better developed proposals to try out on others. Some people like to have all the available facts and plenty of time to analyze them before reaching any conclusions, and some seem to have their minds made up before they could possibly have investigated the options. To communicate ideas effectively and to integrate the strengths of each approach into productive decision making, group members need an understanding of the different ways people perceive and interpret information.

Individual styles of decision making are identified in a model based on the psychological functions defined by Jung (1923). This model, the Myers–Briggs Type Indicator (Briggs Myers 1962), provides a way to identify the psychological functions people use to perceive information and make judgments. To use the model, a questionnaire is administered and the results rated on four scales. The first scale identifies a person's focus as either introverted or extroverted; the second, whether sensing or intuition is the main mode of perceiving information; the third, if thinking or feeling is primarily used to make judgments; and

the fourth, which of the perceiving or judging functions is dominant.

Introverts are concentrators, getting energy from their inner world. They tend to focus on abstract concepts, thoughts, and ideas, and are careful with details. They may be outgoing in a social setting, but need to be alone to recharge. They prefer one project at a time and like to think before acting. In contrast, extroverts are propelled by the outside world of people and action. They are interactors and enjoy variety. Because they are action oriented, they often act too quickly.

The perception scale measures how people collect information. People who are sensors rely on their five senses. They rely on experience and use a historical orientation to examine facts. Sensors prefer established routine. They must work through a problem completely to reach a conclusion, and they dislike complicated, messy problems. Their opposites are intuitors, who are bothered by too much detail. Intuitors draw hunches by finding patterns in data. They are creative discoverers who look at the big picture. They are future oriented, enjoy new problems, and work in bursts of energy. Intuitors are creative, but have a tendency to jump to conclusions.

The third scale distinguishes between thinking and feeling as modes of making judgments. Thinkers make decisions based on logical, objective analysis. They value fairness, and they relate best with other thinkers. Feelers place more emphasis on personal values and needs. Their decisions are more likely to be influenced by the likes and wishes of others. They value harmony and are skilled at resolving conflict. Their primary concern is how a decision will affect people.

An individual's decision-making style is established by early adulthood (Brightman 1988). One of the four psychological functions (sensing, intuition, thinking, feeling) dominates an individual's decision-making process. One of the remaining three functions serves a supporting role, and the other two are relatively undeveloped.

A failure to understand the characteristics of other decision-making styles can lead to misinterpretation, prejudice, and overall difficulty in group communication. For example, people who rely on a sensing style of perception appreciate detail, and they tend to find the descriptions by more intuitive types ambiguous and brief. Conversely, the detail provided by sensors may seem excessive to intuitors. This overload of information may drain intuitors' enthusiasm. Similarly, those who use a feeling mode of making judgments may view thinkers as too task oriented and unconcerned with others. To thinkers, the feelers appear to be more focused on communicating with others than on doing the job. People tend to believe that their own way of decision making is best and wish others would act similarly. The expression of individuality, unfortunately, is often judged as inferiority.

The advantage of group problem solving is that different people have strengths to offset the weaknesses of others. Each decision style has valuable qualities to offer a group. Sensors are particularly skilled at presenting and explaining facts and working through the details. They will work to reduce risks and document previous successes. Intuitors look at the big picture and point out future benefits. They see problems as challenges and opportunities, creating enthusiasm for the task. Thinkers provide logical, well-organized reasoning to assess the costs and benefits of alternative solutions. Feelers introduce moral and ethical issues and consider how the people involved will be affected. By understanding the different styles of decisionmaking, we can use our strengths more effectively and recognize when other approaches are more appropriate. Because extroverts tend to dominate group interactions, extra encouragement may be needed to gain the insights of the more introverted members. Group decision making will be improved when we are able to value and use the strengths of each individual's style and know how to communicate effectively with each other. Different situations require the strengths of different thinking styles; no one style is ideal in all circumstances.

Much literature is available on the Myers-Briggs Type Indicator, as well as on other models of thinking styles. Brightman (1988) prepared a particularly good summary of the implications of the Jungian psychological function in group decision making. See Briggs Myers and McCaulley (1985) for information on the indicator itself.

Group Composition and Size

Structured procedures and good leadership can contribute much to group decision making, but the composition of the group itself is the most crucial element. The persons included in an effective prob-

lem-solving team must not only be committed, responsible, and possess skills and knowledge relevant to the problem, but also be able to work well together. An ideal combination of professionals with complementary skills and personalities seldom exists; however, a few guidelines can help to prescribe the selection of members to form an effective group.

The problem-solving group must have the authority, ability, and influence necessary to implement the changes needed to solve the problem. The involvement of those in positions of power or influence is required for the group's solutions to be accepted and implemented. Individuals, institutions, or groups that have interests affected by the problems or the solutions under discussion also should be represented. Representatives of opposition groups should participate in the decision-making process. Their inclusion is likely to increase tension and conflict within the group, but their participation can promote successful implementation of the eventual solution. It is easier to include conflicting views at the beginning of the process than to prepare for a battle later. People whose commitment and cooperation is crucial to the implementation of a solution also should be included. The ownership of the solution by those who will eventually be responsible for fulfilling the group's objectives is essential.

VanGundy (1984) identified 15 personality traits generally possessed by creative people as intelligence, absence of repression and suppression, feminine and aesthetic interests, self-confidence, tolerance for ambiguity, willingness to take risks, the ability to use convergent and divergent thinking, originality, ability to generate many ideas, flexibility, elaboration, independence of judgment, ability to use both right- and left-brain thinking, perseverance, and a view that they have control over their lives. A creative group will include persons with many of these characteristics.

Heterogeneous groups offer the diversity needed to develop innovative solutions, and they are less susceptible to groupthink tendencies. Members with a variety of perspectives help the group remain aware of opposing views and the potential difficulties associated with their proposals. Because heterogeneous groups are more likely to understand the problem and potential solutions from a broad perspective, the odds of successful implementation are improved. To form a heterogeneous group, include persons with different experience and educational backgrounds, as well as different decision-making styles.

It may not be practical to include persons from all perspectives and who possess all the skills and characteristics desired, but try to form a competent and diverse group. Such groups are more difficult to lead, but they have greater potential to create successful, innovative solutions. Skillful leadership or structured techniques are usually needed to keep the group focused on the problem. A certain degree of cohesiveness and compatibility also must be maintained so the group members can work together to achieve their common goals.

Limiting group size to a manageable number may limit diversity, but the group should be small enough so all the members are known to each other (Fisher 1980). Individual involvement becomes more difficult as the size of the group increases. A study of how teams of managers and Master of Business Administration students solved a ranking task found that group performance improved as group size increased from three to five members but declined for larger groups (Yetton and Bottger 1983). Each member of the group should have the opportunity to react to every other member. For optimal communication, groups should be limited to seven members: an ideal problem-solving group has five members (Brightman 1988). Groups of eight or more should be divided into subgroups.

The Problem-solving Process

A distinct process is followed when making even the simplest choices. The steps in this process have been modeled in many different ways (Evans 1986). An abstract model identifies preparation, incubation, inspiration, and verification as the activities that compose the process of solving problems (Evans 1986). However, most pragmatic problem-solving paradigms include, in one form or another, the stages of identification and analysis of the problem; definition of goals and objectives; identification and evaluation of alternative solutions; selection of the best solution; development and implementation of a management plan; and monitoring and evaluation (Napier and Gershenfeld 1985; Evans 1986; Brightman 1988).

The exact statement of the steps involved is not crucial; however, it is important to explicitly state

at the outset of a decision-making process what steps are going to be taken and how the ultimate solution is going to be determined. Clearly defining the steps to be followed also has the advantage of focusing on one task at a time. Unfortunately, it is human nature to start proposing solutions before the problem is clearly understood. There is a tendency to combine or skip several steps, especially when solving relatively familiar problems, and a person thinking of possible solutions may dismiss those steps that do not seem worthwhile. Team members may jump to conclusions about the source of the problem and immediately offer possible solutions based on false assumptions. Definite steps help pace the process so crucial aspects are not overlooked.

Solving a problem may not follow a straight progression from one step to the next. Near the completion of each step, check that the work is still on track with the original objectives and the conclusions of previous steps are still valid. Discoveries during one phase may indicate previous conclusions need to be reassessed. For example, information could be discovered when generating or evaluating alternatives that changes the perception of the problem. Barriers to implementation may be harder to overcome than anticipated, changing the criteria for evaluating the alternatives. Thus, whereas a general progression from problem recognition to implementation of a solution is expected, interaction exists between the individual phases. Making the best use of available information requires flexibility and openness.

Negotiation should take place throughout the entire process if all key interests are involved in a collaborative effort from the beginning. If all parties do not agree on the problem definition, or even that there is a problem, starting negotiations when alternative solutions are evaluated may be frustrating.

Identification of the problem. The first step toward making a decision is to recognize that a problem exists. If there is no problem, no choice need be made. A problem exists when there is a discrepancy between the current or historic state (where we are or were) and the desired or expected state (where we want or expect to be) (Watson 1976; Brightman 1988). The problem is this difference between the actual and desired conditions. This definition of a problem can help lead to problem solving by encouraging a thorough determination of both the current conditions and the desired outcome. Problem recognition means finding inconsistency; problem analysis seeks to identify its causes. The gap can be discovered in several ways. For example, project plans, budgets, or previous records may indicate declining performance; the public may let it be known that its expectations are not being met; or those affected may become aware of higher standards achieved in other geographic areas or by other organizations, raising goals or expectations.

The existence of a problem may present itself in more subtle ways, such as increased tension, conflict, or inefficiency. This is especially true if people sense that a direct approach to the problem is unacceptable. Such an atmosphere is likely to foster additional problems that hide the true problem. Thus, when the perceived problem is addressed, it may actually be only a symptom of the deeper, true problem. To minimize such an entanglement of causes and symptoms, expose problems as soon as they are recognized. Once exposed, problems should be addressed, not minimized or ignored; otherwise, people will not continue to voice their concerns.

For a variety of reasons, problems may not come to light. Those who have the authority to deal with problems may have the most trouble recognizing them. Problems may be viewed as personal failures; therefore, they are ignored to avoid blame. Subordinates may not inform managers of problems until a crisis occurs. The problem may be too complex to easily comprehend, resulting in oversimplification to the point that the actual problem is not addressed. A lack of experience with the context of the problem also may be deceptive. The difference between normal conditions and a problem may not be clear. Problems also may be hidden by a lack of explicit objectives: without standards to measure how current conditions meet expectations, problems cannot be identified.

Once a problem is recognized, those responsible for making a change must reach agreement about its existence and be willing to do something about it. Coming up with solutions will be a waste of time if those affected have not accepted that the problem exists.

Analysis of the problem. Problems can be classified into disturbance problems and entrepreneurial problems (Brightman 1988). Disturbance problems are characterized by a decline in performance or

conditions; the expected continuity was somehow disturbed. For these type problems, the causes of the unwanted disturbance need to be identified. Entrepreneurial problems are gaps between present conditions and desired (improved) conditions. Articulating decision goals is crucial when defining entrepreneurial problems because the focus is on reaching a new, higher objective, rather than finding the cause of something that went wrong.

The goals of problem analysis are to separate causes from symptoms, determine the priority or urgency of finding a solution, and decide if the problem is best handled by a group or an individual. A well-defined problem is half solved. To compare the process to medical diagnosis, problem definition has been described as problem diagnosis. This analogy emphasizes that a clear understanding of the problem is essential to reach a successful solution. Unfortunately, the definition of a problem is often assumed to be understood, though misapprehensions about the group's purpose are common. The real activity of coming up with solutions and getting to the action is so tempting that it takes a conscious effort to postpone solving the problem until it is thoroughly known. The temptation is to do something, even if it is wrong. Activity may be a cover-up for not thinking or a response to external pressure for action. In a study of 73 managerial solutions, the problem was not explicitly stated in 63 of the cases (Nutt 1984).

Definition of goals and objectives. An understanding of the goals and objectives is often assumed. The group's objectives need to be explicitly stated and agreed upon to avoid wasting time, effort, and money. Even if what the group intends to accomplish seems obvious, it usually is not. Individuals may have a wide range of reasons for participating in the decision-making group, and various members may have very different impressions of the group's purpose and goals.

The group needs to define its resources, authority, and power, as well as the constraints it faces in solving the problem, and it must set realistic goals and objectives. Besides being realistic, goals and objectives should reflect the values of the organization and individuals involved. Identifying values and their origins is often helpful in resolving or at least clarifying conflicts regarding the group's goals. Consensus may not be possible if values differ greatly.

Goals and objectives may be partially identified during problem recognition and diagnosis. Goals tend to be stated in relatively abstract terms, whereas objectives should be specific and quantifiable. A goal might be to improve the quality of fish habitat in a certain river, whereas a supporting objective might be to increase the population of a particular species by 20% within 5 years. A meaningful objective describes specific, numerical, measurable achievements and the timeframe in which they will be accomplished. Objectives are needed to measure and evaluate the alternative solutions and to monitor the implementation. If specific objectives are not declared, it will be difficult to know if the problem is ever solved.

Identification of alternatives. Usually, more motivation exists for generating possible solutions than for problem clarification. It is more gratifying to think of ways to improve the current state of affairs than to figure out how such a mess was created in the first place. If the problem is clearly defined, the alternative generation phase will be more fruitful and appropriate.

In some respects, problem definition and the identification of alternatives are directly linked. The way the problem is stated may imply possible solutions. However, even with a clear understanding of the causes of the problem and the persons involved, attitudes that inhibit creative thought can prevent the group from generating creative solutions. Organizational politics may dominate group interaction. To protect their jobs, participants may be more concerned with avoiding the risk of being held responsible for failure than with finding creative solutions. On the other hand, too much competition may inhibit generating innovative solutions. When group members have a strong stake in the acceptance of their particular proposal, they often criticize other ideas in an attempt to improve the status of their own. When confronted with that type of behavior, other members of the group are likely to react in a similar way, and the progress of problem solving can quickly come to a halt.

A focus on individual rather than group success can create an atmosphere where people cannot separate acceptance of themselves from the acceptance of their ideas, a difficult feat even in a supportive environment. Some risk is involved in problem solving, especially when members are asked to

offer the unorthodox ideas needed to stimulate creative solutions. All proposals cannot be accepted, but they all offer insight valuable for the eventual solution of the problem.

The timid explorer model (Brightman 1988) describes another way groups avoid creative problem solving. Successful solutions to similar problems are investigated and borrowed rather than thoroughly investigating the current situation. Little risk is involved because the idea has already been tried and proven. If the solution fails, the team will not be held responsible. Learning from other experiences is not a weakness, but using other solutions to avoid a formal evaluation of the current situation is. No two problems are exactly alike, so if a borrowed solution must be forced to fit, it probably will not work. Other common weaknesses in the alternative generation phase include generating only a few ideas, or several ideas that are based on only minor variations, or considering only one or two rather complete ideas. In the latter case, the group is actually generating, screening, and elaborating on ideas at the same time.

Watson (1976) suggested several other weaknesses that may inhibit the production of creative ideas. The attitude that there is only one way to do things certainly inhibits creativity. Such rigid thinking may be expressed by clinging to a previously successful approach, even though circumstances have changed. Those caught up in rigid thinking are usually limited by a need for certainty and the fear of facing unknown situations. When creative suggestions are not offered, it may be useful to ask why a different approach is out of the question. Keep in mind that sometimes the cost of solving a problem is greater than the cost of living with it. For example, it is often cheaper to keep adding oil to an old car than to fix the engine.

Developing alternative solutions is the creative phase of problem solving. The goal is to come up with as many diverse ideas as possible. Generating ideas is a divergent activity, so a minimum of structure, rules, and censorship is desired. Screening or critiquing ideas at this time will only inhibit the process and limit the solution to conventional patterns. The participation of all members is particularly needed. Brainstorming has traditionally been associated with this phase of problem solving; quantity is the goal. Participants are encouraged to expand on or combine each others ideas. Wild ideas should not be discouraged. Even the most offbeat idea may shed light on a particular aspect of the problem and contain an element of truth that will improve a more realistic approach. Techniques using analogies help groups think of more innovative ideas when they get stuck.

Once a sufficient number of ideas is generated, skeletal plans are developed (Brightman 1988). A skeletal plan is a one-page description of the strengths and weaknesses of the idea and a rough estimate of the costs and benefits. Several of the most promising proposals are then chosen to be fully developed into alternative solutions for formal evaluation. At an absolute minimum, two substantially different options should be considered. The object of the initial screening is simply to eliminate infeasible ideas and identify a manageable number of options for detailed comparison.

It is important to keep checking that the work is still on track. Ask questions such as the following:

1. Do the suggested alternatives lead to accomplishing the goals and objectives that were established?
2. Are alternatives viable, addressing all aspects of the problem?
3. Are either great ideas or pet projects being suggested that actually have little to do with solving the problem at hand?
4. Is the group still solving the same problem?

Evaluation of alternatives and selection of the best solution. Once several options have been chosen for serious consideration, information must be collected regarding how each meets the goals and objectives; its strengths, weaknesses, and uncertainties; and the means and costs of implementation, so that an informed comparison can be made. Evaluation converges on selection of the final solution and relies on structure, rules, and procedures. It is certainly the most studied and developed aspect of decision making.

Although complex simulation models can be used to compare options, evaluation techniques do not need to incorporate such models to provide valuable assistance to decision makers. An evaluation technique is simply a means of quantifying the characteristics of the various alternatives so they can be compared explicitly. A more elaborate model, however, is not necessarily a more accurate

one, as it may be based on more assumptions. The detail gained by increased complexity is usually more than offset by the increased difficulty in using the method. Simpler, easier-to-apply techniques are more likely to be used and can offer useful analysis for decision making. Straightforward, yet thorough and logical methods that quantify, define, and clarify the strengths, weaknesses, and uncertainties of the alternatives are preferred. Evaluation techniques are only tools; decisions depend on judgment. The role of decision analysis is to aid in the process by ensuring that the decision makers are aware of the alternatives, consequences, and uncertainties involved (Committee on Environmental Decisionmaking 1977).

Development of a management plan. Once the preferred solution has been chosen, develop a complete plan for implementation. In the plan, thoroughly describe the solution, the goals and objectives it seeks to further, and the means of implementation. Clearly answer the questions of what will be done, how, when, and by whom. Include a monitoring plan to track and measure the degree of the solution's success, and provide feedback to the decision makers.

Implementation. Implementation is a crucial stage in addressing the problem, but not actually part of decision making. Concerns about the potential success of a solution's implementation are woven throughout the problem-solving process. The decision-making team may not be directly responsible for implementing the alternative it chooses, but how its choice will be put into effect and the barriers that choice may face are of foremost importance. To provide a realistic comparison between alternatives, identify potential obstacles to implementation for each alternative. Include those responsible for implementation and those who may sabotage an unpopular solution in the decision-making process. Those who will be responsible for implementing a plan must be committed to it. Participating in the decision-making process establishes ownership of the final solution that will be lived with. However, it is not always practical to have everyone who is key to the implementation included in the problem-solving group. At a minimum, keep them well informed as a solution is chosen.

Monitoring and reevaluation. In a sense, monitoring and reevaluation are part of both the problem-solving process and implementation of the solution. The completion of each problem-solving step includes monitoring to ensure that the goals and objectives are met and reevaluating previous conclusions in light of new information. If a particular task or method has reached a dead end, a different approach may be needed to get things moving again. After the decision is made, some form of evaluation of both the process and content of the decision is helpful. The decision itself can be reevaluated by holding a second chance meeting where any remaining doubts are raised after a tentative solution has been chosen.

Monitoring is typically associated with checking the results of implementation of the management plan. Monitoring helps ensure that the solution is carried out as intended and provides an early alert to problems as they arise. A monitoring program is an effective means of identifying problems and triggering the problem-solving process. Because all aspects of a problem are rarely resolved by the first attempt, monitoring can provide information needed to identify what aspects need further action. As illustrated in Fig. 1, monitoring is defined best as one step in a cyclical process, rather than the end of the line.

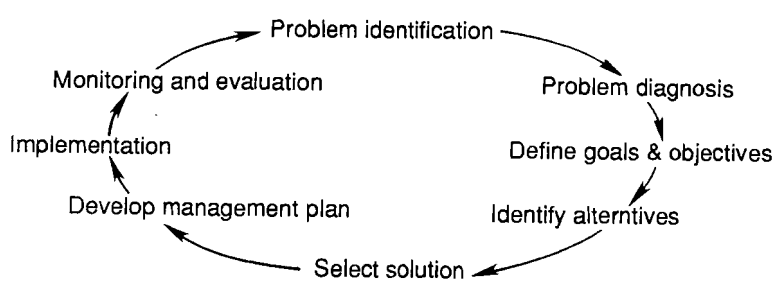

Fig. 1. The problem-solving cycle.

Part 2: Decision Analysis Techniques

In the previous section we discussed pitfalls of group problem solving and general principles that may improve the quality of group decisions. We also introduced a model of the problem-solving sequence. Here we examine each of the problem-solving steps in greater detail and present structured analysis techniques. Some of the methods described are designed for a particular activity in the decision-making process, such as generating possible solutions or evaluating alternatives. Other methods, such as the nominal group technique or Delphi method, are applicable to several stages of problem solving. Problem analysis techniques and their potential application to the problem-solving stages are shown in Table 2. The list of techniques is not exhaustive; those included were chosen because they apply to biological issues and are easy to understand and use.

The purpose of these methods is to separate the problem-solving process into its components to better understand the problem, encourage creative and innovative thinking, and provide a way to document the choices and decisions made. To achieve these ends, techniques should be selected and modified to fit each situation. No single approach will be helpful for all problems. The descriptions are concise, and the techniques are easy to follow and apply; however, a cookbook approach to solving complex problems is not intended. The proper approach is to use these techniques to stimulate innovative thinking that focuses on creative problem solving rather than mastery or use of any particular method.

Each method has its own strengths and weaknesses. Those relatively easy to learn and use may not be particularly thorough or quantitative; more-involved techniques may require more time and skills than are realistically available. A chart that rates the techniques presented in this document on several characteristics is shown in Table 3. Choosing an appropriate approach in each situation requires an evaluation of the priorities and resources available. There must be agreement on a technique by all members in a problem-solving group.

Table 2. *Possible uses of analytic techniques in the problem-solving steps.*

Analytical technique	Problem-solving steps	References
SWOT	Problem identification; evaluation of alternatives	Cooper and Ploor (1986); Brightman (1988)
Nominal group	Problem analysis; definition of goals and objectives; identification of alternatives; evaluation of alternatives; development of management plan	Delbecq et al. (1975); VanGundy (1984); Brightman (1988)
Backstep (cause and effect)	Problem identification; problem analysis	Erickson (1981); Armour and Williamson (1988)
Force field	Problem analysis; implementation	Erickson (1981); Napier and Gershenfeld (1985)
Five W's	Problem analysis; development of management plan	VanGundy (1984)
Kepner–Tregoe	Problem analysis	Kepner and Tregoe (1965); Watson (1976); Brightman (1988)
Watson's circles	Problem analysis	Watson (1976)

Table 2. *Continued.*

Analytical technique	Problem-solving steps	References
Problem boundary	Definition of goals and objectives	Brightman (1988)
Alternative world view	Problem analysis	Brightman (1988)
Delphi	Identification of alternatives; evaluation of alternatives	Delbecq et al. (1975); Crance (1987a)
Brainstorming	Identification of alternatives	VanGundy (1984); Napier and Gershenfeld (1985)
Synectics	Identification of alternatives	Gordon (1961); Prince (1970); VanGundy (1984)
Goal attainment	Definition of goals and objectives; evaluation of alternatives; monitoring and evaluation	Brightman (1988)
Fact-net	Problem analysis	Ramakrishna and Brightman (1986)
Ordinal ranking	Evaluation of alternatives	Erickson (1981); Armour et al. (Unpublished manuscript)
Weighted rating	Evaluation of alternatives	Erickson (1981)
Impact factoring	Evaluation of alternatives	Erickson (1981)
Decision trees	Evaluation of alternatives	Behn and Vaupel (1982); Maguire (1986); Maguire et al. (1987)
Analytical hierarchy	Evaluation of alternatives	Saaty (1982)
Multicriteria utilities	Evaluation of alternatives	Keeney and Raiffa (1976); VanGundy (1984); Armour et al. (Unpublished manuscript)
Risk matrices	Evaluation of alternatives	Markland (1983)
FAST	Development of management plan	Erickson (1981); Armour et al. (Unpublished manuscript)
Milestone charts	Development of management plan	Erickson (1981)
Gantt charts	Development of management plan	Erickson (1981); Brightman (1988)
Precedent diagrams (PERT)	Development of management plan	Erickson (1981)
Timescale networks	Development of management plan	Erickson (1981)
Flowcharts	Development of management plan	Erickson (1981)

Table 3. *Characteristics of analytical techniques (L = low; M = medium; H = high).*

Analytical technique	Inter-disciplinary approach	Quantitative	Documents logic	Handles many ideas	Illusion of infall-ibility	High leader-ship skills required	Time consuming	Complexity	Task oriented	Reduces conflict potential	Meets need for social interaction
SWOT	M	L	M	M	L	L	L	L	M	M	H
Nominal group	H	H	H	H	M	M	M	L	H	H	L
Backstep	H	L	H	H	M	L	M	M	H	M	M
Watson's circle	M	L	M	M	M	L	L	L	M	M	M
Five W's	H	L	H	H	L	L	L	L	H	M	H
Kepner–Tregoe	H	L	H	H	L	L	L	L	H	M	H
Force field	H	M	H	H	M	L	M	L	H	M	M
Problem boundary	M	L	M	M	L	M	L	L	M	M	M
FAST	M	L	H	H	M	M	M	M	H	M	H
Goal attainment	H	H	H	M	H	M	M	M	H	M	M
Brainstorming	H	L	L	H	M	H	L	L	H	M	H
Synectics	H	L	M	M	M	H	M	H	M	M	H
Delphi	H	M	H	L	M	H	H	M	H	H	L
Ordinal ranking	M	M	H	M	M	L	L	L	H	M	M
Decision trees	L	H	H	L	H	H	M	H	H	M	L
Multiattribute	H	H	H	M	H	H	M	H	H	M	L
Gantt charts	M	M	H	M	M	L	L	L	H	M	L
Flowcharts	M	L	H	H	M	M	M	M	H	H	L
Precedent diagrams	M	M	H	M	M	M	M	H	H	H	L

Problem Identification

A problem-solving process cannot begin until the group recognizes and agrees on the problem. Without consensus on the definition of the problem, further efforts are likely to be ineffective. It is frustrating to have a disagreement erupt about what the problem is in the latter stages of the process. A problem assigned or otherwise imposed from an external agency or process may be well defined, with little left to the group members' imaginations. Yet, even in situations where the problem seems obvious, it is a good idea to verify that the interpretation of each individual is compatible with a collective effort.

Strengths and Weaknesses, Opportunities and Threats (SWOT) Analysis

One way to identify problems in an organization is to examine the internal strengths and weaknesses and external opportunities and threats. This method is called Strengths and Weaknesses, Opportunities and Threats (SWOT) or WOTS analysis (Cooper and Ploor 1986; Brightman 1988). Strengths and opportunities are positive factors contributing to the organization's function; weaknesses and threats are barriers to be overcome. To conduct a SWOT analysis, group members (collectively or individually) complete a form such as the one shown in Fig. 2. Combine the individual efforts and rank the factors identified in order of importance. This examination of internal and external elements helps define a problem by identifying strengths or opportunities needing to be supported or pursued, and weaknesses and threats needing to be addressed.

The completed SWOT diagram in Table 4 is an example from a region that experienced conflicts related to maintaining instream flows. A SWOT analysis was conducted to clarify the issues relating to increasing public knowledge and participation in instream flow protection.

Internal Factors	External Factors
Strengths	Opportunities
-	-
-	-
-	-
Weaknesses	Threats
-	-
-	-
-	-

Fig. 2. Format of a SWOT diagram.

Table 4. *SWOT diagram for a public education program.*

Internal factors	External factors
Strengths	**Opportunities**
Strong agency support	Encourage public interest and support for instream flow recommendations
Rich mix of skills available	Inform public of resource conflicts and options to achieve multiple-use objectives
Funds available to support activities	
Time is right (i.e., activity is appropriate for current agency policies)	
Ability to develop and disseminate educational materials	
High individual interest and motivation for project	
Weaknesses	**Threats**
Short time to accomplish goals	Uncertain level of public interest in actively using information and resources developed
Difficulty in determining priority actions	Uncertain of funds available to support citizen participation in training opportunities
Conflicting demands on professional staff	
Key material cannot be thoroughly conveyed in available course	
Existing educational material unavailable, must be developed	
Clear reference material for future use needed to be effective	

Nominal Group Technique

The nominal group technique is a format for structured group interaction used to identify elements of a problem, elements of a solution, or priorities. It requires participation by all members and limits the potential of a few individuals dominating the group. The nominal group technique keeps the group focused on the task and helps the group members be more open to each other's ideas. It generates high quality ideas and brings out various dimensions of the problem. Group progress is carefully paced because each session is limited to one issue or question.

The nominal group technique works best with groups of five to nine members (Delbecq et al. 1975). Each person needs paper, pen, note cards, and table space for writing. The leader also needs a flip chart to record the group's ideas. The steps in the technique are as follows:

1. after welcoming the group, the group leader or facilitator reads and presents a written problem or question;
2. group members silently write as many responses or ideas as they can;
3. participants present their ideas one at a time during a round-robin, while the leader records each idea on a board or flip chart;
4. each idea is briefly discussed;
5. individuals secretly rank order their top choices (usually five to nine items);
6. the results are recorded and inconsistencies briefly discussed; and
7. the rank ordering process is repeated if necessary.

The major preparation for using the nominal group technique is designing a question that will elicit the desired information. Design questions to encourage broad speculation or in-depth elaboration. Those preparing the question must be clear about their objectives, and whether abstract or specific information is needed. Delbecq et al. (1975) suggested several questions be developed and tested with a sample group.

Resist making any clarifying comments when introducing the question: each individual's interpretation is important. Allow 5 minutes, usually enough time, for the group members to silently record their initial ideas. Record the members' ideas on a flip chart to provide a written rather than personal reference for the ideas presented, and to help maintain a more objective focus by separating ideas from personalities. Present each idea in a brief phrase. Encourage the group to continue adding ideas to their lists and to combine or elaborate on the ideas of others. Eliminate duplicate ideas if the author agrees, but variations on a theme are desirable.

Briefly discuss each idea once all are recorded. This provides an opportunity to clarify and explain the rationale behind each idea. Encourage each member of the group to raise questions, offer insights, and provide statements of agreement or disagreement. Air differences of opinion, but avoid arguments for particular positions. Once all ideas have been discussed, the group can vote and rank the proposals.

Rank order voting is done individually. Each person selects a predetermined number of items he or she believes are the most important out of those presented. Selecting and ranking five to nine items is the most effective (VanGundy 1984). Before the ranking process, establish the criteria used to compare the ideas and the ultimate use of the items selected. Instruct group members to first select their priority items and write each on a separate 3- by 5-inch card. Rank the items by writing a number in the lower right hand corner of each card. For example, if five items are to be chosen, the item with the highest priority would be ranked 5, the lowest 1. Collect and shuffle the cards, then tally the votes and record the scores on the flip chart. The result of the meeting is identification of the top-scoring item or items. If this method is used as part of the problem identification phase, the top several items may be incorporated into a problem statement. Repeat the voting process if necessary to arrive at agreement on the single most important item.

When the nominal group technique is used at any stage of problem solving, repeat the discussion and voting steps if major discrepancies are revealed in the voting or if more agreement is needed. Use the second discussion step to clarify the issues surrounding items that the group believes received too many or too few votes. Keep discussion brief to avoid minimizing the significance of items not discussed and so the process is not used to exert pressure to conform.

Modify the technique as necessary by adding other voting or ranking procedures (Hegedus and

Rasmussen 1986; Frankel 1987). In one alternative, each group member distributes 25 points over at least seven items. The ideas receiving the most collective points are chosen for further consideration. The top alternatives can be synthesized by the group or by use of the Delphi technique, described in a later section. For complex problems, divide the initial list of ideas into categories if necessary, then address each category. These modifications seek to address the complexities of many life problems that do not fit into a one question, one answer model.

Although the nominal group technique is a formally structured, single-purpose technique, it can be modified for flexible or spontaneous use. However, do not adjust the process or change the topic in the middle of the session. The nominal group technique requires a fair amount of preparation and time to complete (usually 1–2 h). The relatively rigid structure may be uncomfortable to those unfamiliar with the technique, but most participants express satisfaction after its use. In some cases the amount of information generated increases rather than decreases the complexity of the task. The nominal group technique may be difficult to apply to decisions requiring long and difficult reasoning processes not readily divided into smaller components (Hegedus and Rasmussen 1986).

U.S. Fish and Wildlife Service personnel from the Annapolis, Maryland, field office used the nominal group technique at a workshop conducted to address environmental problems affecting Chesapeake Bay. The problems surrounding the general degradation of the bay were so complex that they did not reach agreement on a specific problem during the first meeting. People had difficulty sorting out key problems from related symptoms and causes. Some professionals had difficulty recognizing the effect of causes outside their own area of expertise. Despite these barriers, the group needed to identify one key problem to address so a plan of action could be developed. At the second meeting, they used the nominal group technique to identify a priority issue.

The leader briefly explained the nominal group technique to the group before the process began. The question was "What is the key environmental problem affecting Chesapeake Bay?" Participants had the opportunity to record up to five responses in the form of brief phrases (Table 5) that were compiled into a master list (Table 6). The group then discussed the master list to clarify the items presented. The facilitators carefully restricted comments, allowing only questions and comments regarding clarification, and prohibiting debate or expression of personal opinion. After this brief discussion, the group ranked the top five items on the master list in the format shown in Table 7. Votes were collected and tallied, and "loss of submerged aquatic vegetation" was identified as the key problem to be addressed. If one item (loss of vegetation) had not emerged as a winner, a second round of voting could have been conducted to rank those items that had received a significant number of votes in the first round. If the second round of voting still resulted in a relatively long list of items, the facilitators would have asked the participants to rank the top one-third of the items in the total list (e.g., if 15 items are left, rank the top 5 choices).

Table 5. *Sample nominal group personal item list. List composed of up to five responses in short statements (seven or eight words, if possible), with only one line per idea, to the question "What is the key environmental problem affecting Chesapeake Bay?"*

Item number	Sample item list response
1	Decline in anadromous fish population
2	Barriers to migration
3	Loss of submerged aquatic vegetation
4	Excessive nutrients
5	Acid precipitation

Problem Statement

After completing any problem identification method, the goal is to prepare a problem statement acceptable to all group members. It is essential that all members of the group agree on the definition of the problem. The group may need additional information to complete a problem identification technique or to define the problem in terms of the difference between the present and desired conditions. Such a statement requires a clear description of both the current situation and the desired outcome, in enough detail to guide the problem-solving process and to be able to measure or otherwise indicate when the desired outcome has been achieved.

Table 6. *Sample nominal group master list. Responses are for the Chesapeake Bay question in Table 5.*

Item number	Nominal group master list of responses
1	Degraded water quality
2	Loss of submerged aquatic vegetation
3	Intensive shoreline development
4	Excessive nutrients
5	Oversedimentation
6	Lack of knowledge and public awareness
7	Acid precipitation
8	Overharvesting
9	Loss of marsh and wetland habitat
10	Unknown effects of new generation of contaminants
11	Decline in anadromous fish population
12	Problems caused by expanded human population
13	Poor farming techniques
14	Short-term solutions
15	Interagency overlap and duplication of effort
16	Barriers to migration
17	Loss of forests
18	Freshwater inflows as they pertain to salinity
19	Increased oil from commercial and recreational boating
20	Decreases in wintering waterfowl population
21	Inadequate standards on National Pollution Discharge Elimination System stipulations
22	Reduced dissolved oxygen content
23	Political instability at the administrative level
24	Shallow-water loss
25	Excessive channelization
26	Urban nonpoint-source pollution
27	Toxic wastes
28	Decline in oyster populations
29	Decline of all economically important species
30	Decline of all noneconomically important species
31	Lack of commitment by the State
32	Rising sea level

Table 7. *Sample nominal group personal priority list (from master list responses of Table 6).*

Rank[a]	Item response (item number from Table 6)
1	Intensive shoreline development (3)
2	Loss of submerged aquatic vegetation (2)
3	Over-sedimentation (5)
4	Decreases in wintering waterfowl population (20)
5	Increased oil from commercial and recreational boating (19)

[a] 5 for most important, 1 for least important.

VanGundy (1984) presented a test to evaluate the effectiveness of a problem statement in terms of urgency, threat, appropriateness, importance, applicability, and commitment. Each of these characteristics is scored as shown in Table 8. A good problem statement will score at least two yes responses for urgency, threat, or appropriateness and at least 11 points for the remaining criteria. A problem statement that does not meet this test does not adequately define the problem.

Table 8. *Problem statement evaluation test example. Adapted from VanGundy (1984).*

Problem Statement:	70% of submerged aquatic vegetation has been lost in the coastal bay during the past 15 years.
Yes No	Urgency—problem requires immediate action and attention.
Yes No	Threat—consequences of not solving the problem will lead to a loss of value or resource.
Yes No	Appropriateness—the problem is within the group's sphere of influence.
1[a] 2 3 4 5	Importance—extent problem is likely to have a significant impact on the group and its activities.
1 2 3 4 5	Applicability—extent problem is relevant to the group's concerns and needs.
1 2 3 4 5	Commitment—extent that group is likely to persist in developing a solution.
Score: 3 yes 14 points	

[a] 1 = little, 5 = very.

VanGundy's test was used to evaluate the problem statement "70% of submerged aquatic vegetation was lost in the last 15 years" (Table 8). This problem was judged to be urgent, to represent a real threat, and to be appropriate for the group. Because the answers to these first three questions were yes, the problem statement met the first criterion (at least two yes answers). The ratings for importance, applicability, and commitment totaled 14, exceeding the second criterion (a minimum score of 11). According to this test, this statement effectively defines the problem.

Problem Analysis

The most overlooked and arguably the most crucial stage of problem solving is analysis of the problem itself. The following techniques are designed to help postpone making assumptions about the causes of the problem and proposing solutions until the problem is clearly understood and defined. These techniques explore the issues surrounding a problem. Because different techniques address different aspects of a problem, it is necessary to select the technique most appropriate for a particular situation. More than one method may need to be used to come to an accurate understanding of the problem.

Cause and Effect Analysis

Cause and effect analysis provides an understanding of the levels of causes and effects involved in a problem (Erickson 1981). This method was applied to environmental problem solving by Armour and Williamson (1988). Once a problem is recognized, cause and effect analysis is used to identify the underlying causes by moving progressively backward (backstep analysis) to identify factors contributing to the problem. Clarification is often needed to sort out related problems that may actually be symptoms of a base problem. The effects of a problem can be similarly analyzed by moving forward. This technique also helps identify the parts of the problem where the group can have the most effect.

Conducting a backstep analysis, adapted from Erickson (1981) and Armour and Williamson (1988), follows these steps:

1. Agree on the priority issue, then state the problem that, if solved, will result in a healthy ecosystem or elimination of several related problems. Write this problem statement in a brief phrase.
2. Categorize the major contributing factors or causes of the problem (Fig. 3).
3. List the causes from step 2, now viewed as problems, and identify their causes (Fig. 4). Construct a causal chain, moving toward the left with increasing detail. Continue to step back, searching for underlying causes until a logical stopping point is reached.
4. Categorize the major problem effects (Fig. 5).
5. Model the effects, working from the problem statement to the right. Detail or specificity increases to the right for this part of the model (Fig. 5).
6. Continue to verify and revise the model.

Use this procedure to identify the causes or effects of the problem. The result is a graphical representation of the problem network. Arrows are used in these figures to show the direction of analysis. Ideally, the model should be verified by controlled experiments, but this is impractical for complex problems. A simpler form of verification is to document the rationale for cause and effect chains,

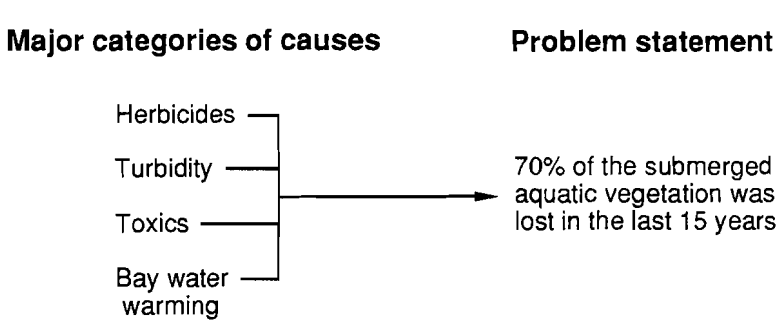

Fig. 3. Example of categories of causes. Adapted from Armour and Williamson (1988)

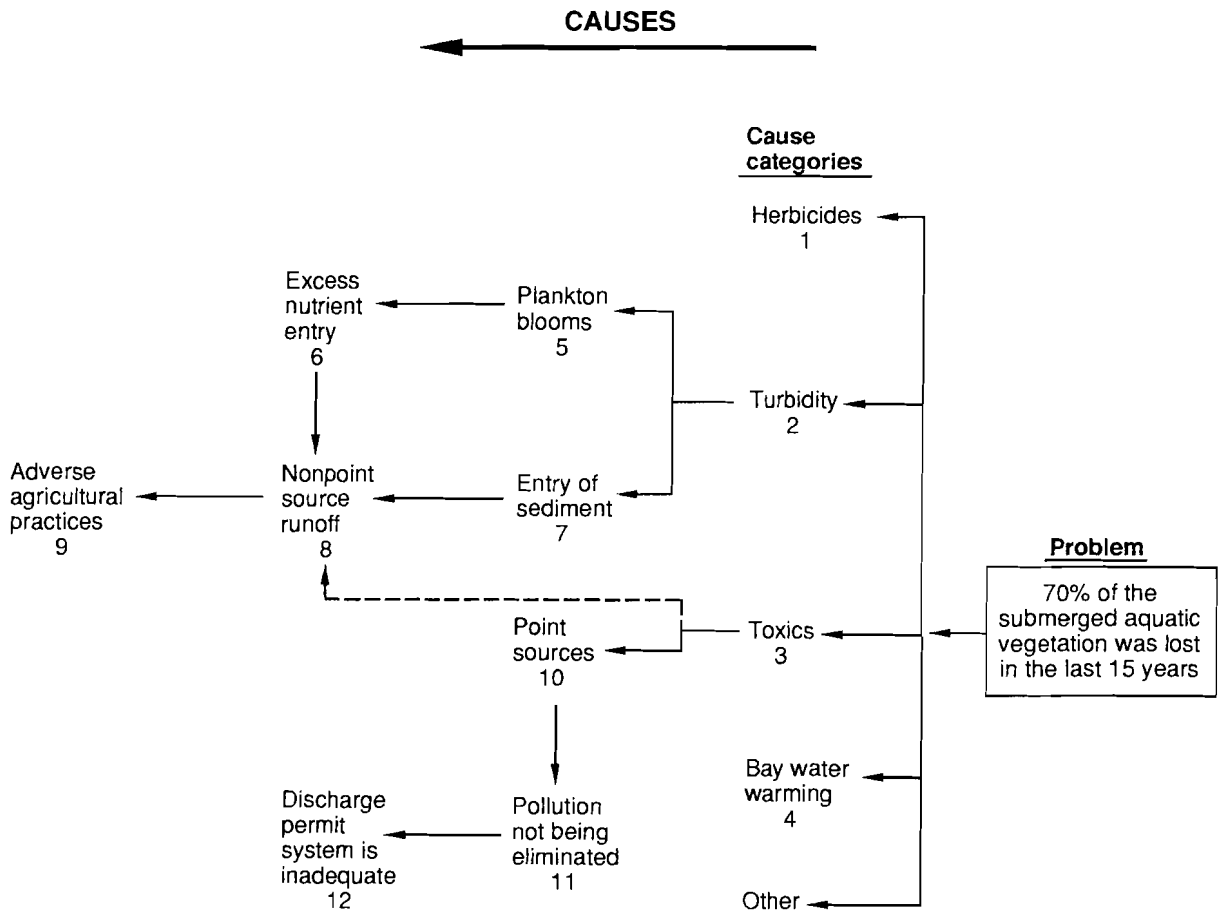

Fig. 4. Example of simplified causes model. Adapted from Armour and Williamson (1988).

citing literature sources, expert opinion, and professional judgment.

The shape of the cause and effect trees created indicates some common problems, as shown in Fig. 6. A tree with one long, spindly branch indicates that the analysis is too single-minded, and a broader perspective is needed in searching for contributing causes. A scrub-brush diagram with many lines emerging from the problem box, but none continuing very far to the right, indicates that the analysis is too superficial. Sort problem causes and relate them to each other as reflected in the branched-tree type of structure. Of course, a perfectly balanced tree may indicate that the participants were more concerned about the structure of the diagram than with accurately describing the problem.

Once the diagram is completed, the group must identify the portion of the problem that it can realistically change. Frustration and lack of interest in future problem-solving activities are likely to be the only results of tackling an area of the problem where those involved do not have the power or influence to induce change.

Causes identified as within the group's control must be ranked according to priority. Pareto's principle suggests this need: "In any series of elements to be controlled, a selected small fraction in terms of the number of elements, always accounts for a large fraction in terms of effect" (Erickson 1981). Only a few of the causes identified during the backstep procedure are probably responsible for most of the problem. To avoid wasting time and effort, the group must focus on the elements that have the greatest effects. Distinguish factors significant enough to warrant further action from those that are relatively trivial. Focusing on one major cause may accomplish more, even if it is

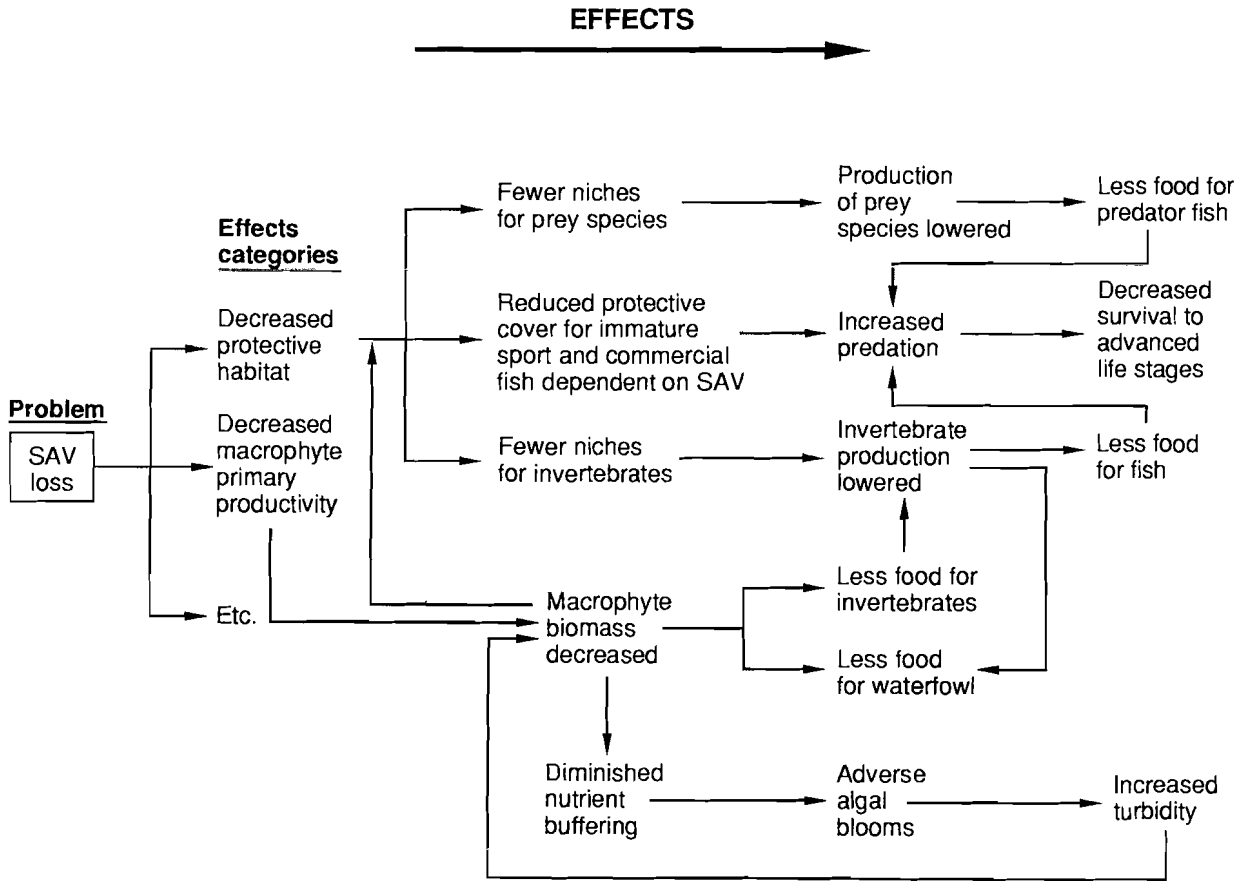

Fig. 5. Example of simplified effects model. Adapted from Armour and Williamson (1988).

much more difficult to address, than addressing all of the minor causes.

Cause and effect analysis provides a clear, graphical representation of the problem and its causes, and aids in identifying an appropriate focus. However, it does not explicitly help a group develop a problem statement, and this is why there must be prior agreement on the problem to analyze. Williamson et al. (1987) and Raley et al. (1988) applied the procedure to analyze ecological problems.

Watson's Circles

Watson (1976) presented another method of analyzing problem causes and symptoms. This technique also provides a graphical representation of problems to isolate one or more root causes:

1. List and number all the related problems and symptoms.
2. Draw circles scattered over a page or board containing these numbers.
3. For each circled number, identify which of the other problems cause or help cause this problem. Draw arrows from the circles identified as causes to the circle being addressed. For example, if problem number 1 is a cause of problem number 2, draw an arrow from circle 1 to circle 2.
4. The root cause is the circle(s) with arrows leading away from it and no arrows leading to it.

Unlinked networks indicate the presence of unrelated problems. Table 9 shows a list of related problems identified for a coastal bay. To use Watson's circles to sort out the symptoms and causes,

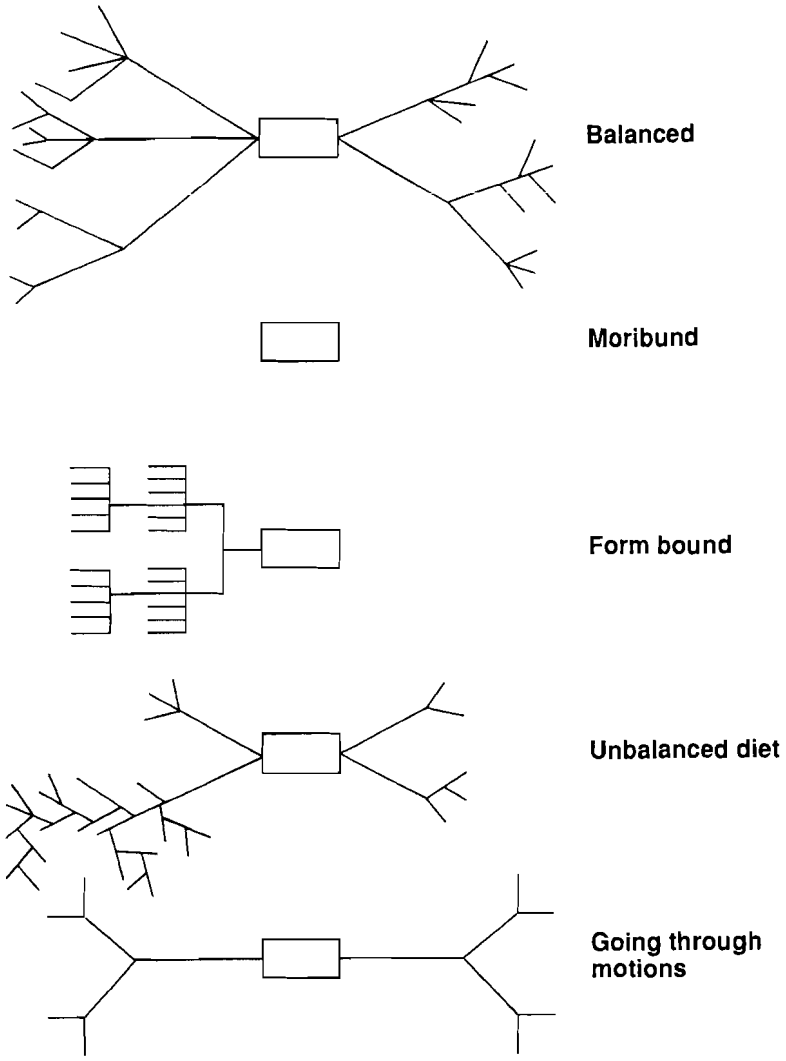

Fig. 6. Diagnostic patterns for causes and effects model. Adapted from Armour and Williamson (1988).

Table 9. *List of related coastal bay problems.*

Item number	Coastal bay problem
1	Herbicides
2	Turbidity
3	Toxic wastes
4	Plankton blooms
5	Sediment entry
6	Bay warming
7	Adverse agricultural practices
8	Loss of submerged aquatic vegetation

draw a circle to represent each of the elements listed (Fig. 7). Examine each element to determine which of the others are direct causes or effects, and draw the appropriate arrows. If the diagram gets too messy, start over by rearranging the circles on another page.

Inflow of herbicides to the bay is caused by adverse agricultural practices, so an arrow is drawn from circle 7 to circle 1. Herbicides, toxic wastes, turbidity, and bay warming all directly contribute to the loss of submerged aquatic vegetation (SAV), so arrows are drawn from these items (circle numbers 1, 2, 3, and 6) to circle 8 (SAV loss). Adverse agricultural practices also cause increased sediment load and plankton blooms from excess nutrients, so arrows are drawn from circle

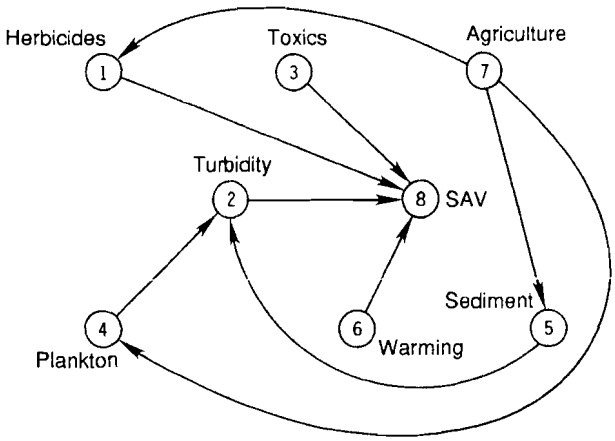

Fig. 7. Watson's circles example.

7 to circles 1, 5, and 4. Plankton blooms and sediment entry are causes of turbidity, so arrows are drawn from circles 4 and 5 to circle 2. In this diagram, toxic wastes, bay warming, and adverse agricultural practices (items 3, 6, and 7) are the root causes because there are no arrows leading to those circles. This method can be useful for problems involving a relatively small number of components (less than 10).

Five W's and Kepner–Tregoe Method

The five W's and Kepner–Tregoe methods use relevant questions to gather information to describe the problem. These methods help decision makers focus on a problem and define it in detail, rather than in broad terms. The five W's method is a representation of the words who, what, where, why, and when. The word how is a natural, although less poetic, addition. Construct questions relevant to the problem using each of these words at least once. Pose as many questions as possible with each word. There may not be an answer to all the questions, but pose the questions nonetheless. The questions may indicate where more information is needed to understand the problem. After answers are adequately supplied, redefine the problem in a clearer, more precise manner.

The Kepner–Tregoe method (Kepner and Tregoe 1965) is a more systematic way of asking questions to clarify the problem definition. Because they encourage assumptions about causes before the problem is defined, *why* questions are not asked. The Kepner–Tregoe method consists of completing the chart shown in Table 10 by asking the questions:

1. What is happening that is a problem?
2. What is not associated with the problem?
3. Where is and is it not happening?
4. When is and is it not happening?
5. To what extent is it happening?
6. Who is and is not involved?

The is not column is just as important as the is column in defining the limits of the problem. Use the last two columns to note any changes or unique

Table 10. *Kepner–Tregoe chart for loss of a trout fishery.*

	Associated with problem			
Question	Is	Is not	Changes	Unique features
What?	Dead rainbow trout in stream	Other sport species	Stream zone no longer provides trout fishery	No pollution in zone
Where?	Lower zone of stream	Upper reaches	10 cfs of water diverted	Trout mortality immediately below diversion
When?	Summer months	Fall, winter, spring	Mortality noted after water was diverted	No problem before diversion
To what extent?	Lower 5 miles of stream	Above water diversion	100% trout mortality	Stocked trout died within 1 day in summer
Who is involved?	Water diverter	Unknown	Permit for diversion obtained	Only diversion present on stream

qualities associated with the problem. If possible, do not use adjectives when answering the questions. If an adjective seems necessary, research the information needed to answer the question more precisely with a noun. Clear, precise answers are desired that are not subject to individual interpretation.

Table 10 shows a completed chart analyzing the loss of a trout fishery. After the Kepner–Tregoe chart is completed, develop a problem statement including the major factors identified. For this example the problem was identified as *rainbow trout no longer survive during the summer months in the 5-mile reach below the water diversion.*

Force Field Analysis

Once the problem is well understood and clearly defined, use force field analysis to assess the feasibility of solving it. This technique examines the power structure associated with the problem by determining what and who will be affected by a change in the current conditions. Use a chart to graphically depict forces favoring and opposing the change required to solve the problem. A force field analysis involves

1. rewording the problem as a statement of action or a goal to be achieved (Write this statement at the top of the chart.);
2. listing all forces favoring the change proposed on the left side of the chart;
3. listing all forces inhibiting the change proposed on the right side of the chart;
4. indicating the relative importance of each factor or force by assigning a rating of high, moderate, or low significance; and
5. reviewing the balance of power to assess how feasible a solution might be.

Table 11 shows a force field analysis for a rainbow trout problem (i.e., diversion has adversely impacted the quality of a rainbow trout stream). The major inhibiting and favoring factors are listed in the appropriate columns and rated according to their impact on implementation of the goal. In this example, a solution may be possible because there seems to be a balance of power; most of the factors listed were considered to be highly significant, both on the favoring and inhibiting sides. Force field analysis can be helpful in identifying situations where a solution will meet insurmountable resistance. If a long list of highly significant inhibiting factors is not balanced by strong favoring forces, a change may be difficult if not impossible to achieve. In such a case, it may be more efficient to direct efforts elsewhere.

A force field analysis provides a graphical estimation of the feasibility of solving a problem. It also provides a means of examining the factors that support a solution versus those that oppose a change in the current situation. This technique encourages the decision makers to predict possible repercussions of their actions, and it implies the need to assess what must be done to overcome the inhibiting forces. In the above example, emphasis would have to be on restoring the fishery or miti-

Table 11. *Force field analysis chart. Goal: Restore the quality of the rainbow trout fishery.*

Favoring forces	Rank	Inhibiting forces	Rank
Public pressure to restore fishery	High	Diverter has legal water right	High
Diverter would like problem to be solved	Medium	Diverter lacks access to other source of water	High
Stream is within Forest Service boundary so Government action might be possible	High	Diverter provides employment for 10 families and this will impede any action that may threaten the continued employment	High
Forest Service policy is multiple-use management	High	Diverter does not have to agree to policy	High
Forest Service has funds to perform study and apply reasonable solutions	High	After problem is understood, solution must be practical to meet needs of diverter	High

gating for the loss through approaches meeting interests of the diverter. For example, if flows in the stream are adequate, it might be possible to improve the channel and to install habitat improvement devices to increase fish carrying capacity.

Defining Goals and Objectives

Define the goals and objectives for a solution once a statement of the problem has been agreed on and the problem has been analyzed from various perspectives. Group members are probably aware of at least a general goal. There must be some concept of the ideal outcome (goal) in order to initiate setting objectives. An overall goal has probably been defined, but the group may have some latitude to identify their own goals and how they will achieve them. Defining or redefining goals can broaden the participants' perspectives and widen the search for solutions. Comparing the group's goals with the results of the previous steps also provides an opportunity to check the appropriateness of the problem definition.

Objectives are more specific and limited than the general ideas stated in goals. Objectives must clearly and specifically define what a solution should produce to contribute towards achievement of the goal. The qualities of a well-defined objective:

1. are stated in specific, quantified terms;
2. contain specifics of when the objective will be achieved;
3. identify a measurable field response; and
4. document the rationale for the objective's contribution to reaching the overall goal.

Objectives specify the criteria that will be used to evaluate potential solutions and implementation success. To present meaningful evaluation criteria, objectives must be measurable. The link between achieving objectives and reaching the goal also must be justified and defensible with documented evidence. Preferably, the need for attaining specific objectives is supported by scientific analysis. The level of documented support for setting a particular objective should correspond to the effort and expense involved. If an elaborate and expensive effort is required to meet an objective, decision makers will want as much information as possible to be certain that expenses are necessary and that they are likely to achieve the desired result.

The techniques presented in this section—problem boundary expansion, functional analysis systems technique, and goal attainment scaling—help the problem-solving group identify and explore the relations between goals, objectives, and problem definition. This exploration prepares the group for developing solutions.

Problem Boundary Expansion

Problem statements can be cast in broad, general terms or narrow, specific terms. There is no correct problem definition and no single solution. A range of problem definitions and solutions is usually appropriate. Different goals illuminate different aspects of a problem and generate different solutions. A problem-solving group needs to be aware of the range of goals that might be relevant to its problem, and it should select the goal that is most appropriate. A diverse group is likely to produce a variety of goals. Use the problem boundary expansion technique (Brightman 1988) to encourage the group to consider a variety of goals. The technique involves:

1. stating the first goal as a phrase in the form of an action verb and object phrase (e.g., We want to educate the public.);
2. introducing the second goal as a condition of the first (e.g., We want to educate the public in order to increase understanding and participation in instream issues.);
3. introducing the third goal as a condition of the second (e.g., We want to increase understanding and participation in instream issues in order to improve the awareness and protection of aquatic resources.); and
4. repeating the steps until all goals related to the problem are stated, a fourth goal introduced as a condition of the third, etc., (e.g., We want to improve the awareness and protection of aquatic resources in such a way as to result in a no net loss of sport fishing opportunities.).

The result of using the technique is a hierarchy of goals all related to the problem. Each goal implies a different approach and different solutions.

Functional Analysis Systems Technique

The Functional Analysis Systems Technique, abbreviated FAST by Erickson (1981), uses a diagram to relate the problem goals, objectives, and tasks. The diagram shows how and why these elements are related. The basic format of the diagram is shown in Fig. 8. For any given element, how it will be accomplished is explained by the next element to the right. Why it will be done is described by the element to the left. When it will be done is an optional element. The highest level goal is shown to the left of the line. Factors beyond the control of the group also can be shown to the left of this line, which limits the elements between the lines to those the group can readily affect.

To use this technique

1. Discuss the boundaries and limits of the problem and attempt to define the scope of the situation.
2. List the goals, objectives, and task elements of the problem, writing each as a short phrase on a separate card.
3. Prepare the diagram format shown in Fig. 8 on a board or large piece of paper.
4. Place each element card on the diagram so the why, how, and when relations are shown. Make changes as gaps are discovered. Eliminate cards that are inappropriate, and change others as needed.
5. When the chart is finished, check for correctness and completeness by asking why and how for each element. Examine the elements to the right and left to see if the relations are indicated correctly.

An example of use of the technique is shown in Fig. 9. One of the strengths of this technique is that tasks focus on achieving the goal. FAST provides a framework for developing a comprehensive plan that explains how the parts of the problem and solution fit together. Actions can easily be organized and redundancies eliminated. The explicit logic requiring tasks to be appropriate for the goal helps eliminate manipulation of the problem-solving process to serve other purposes and provides a basis for resolving conflict. Further description of how this method can be used to organize tasks when developing a management plan is available (C. L. Armour, S. C. Williamson, S. L. Funderburk, and G. W. Kinser, U.S. Fish and Wildlife Service, Fort Collins, Colo. unpublished manuscript).

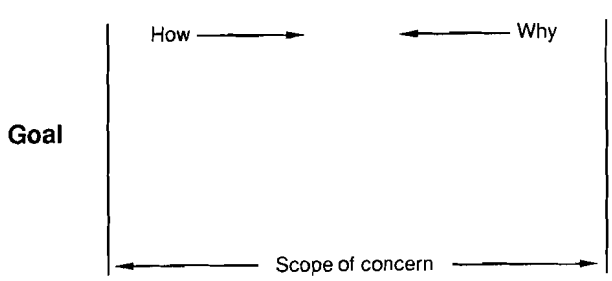

Fig. 8. Functional analysis system technique format.

The Functional Analysis Systems Technique also has its weaknesses. People may be reluctant to use the technique because it appears complicated. Someone experienced in applying the technique may need to lead a training session. Users can easily become overwhelmed by attempting to incorporate excessive amounts of information into the model if discrete categories of action are not established at the beginning. Conversely, oversimplification can result in a diagram that has little meaning. Some trial and error is involved in this method, and a trial run or two is usually needed to establish the appropriate level of detail.

Goal Attainment Scaling

Erickson (1981) described goal attainment scaling, useful during both the goal and objective definition, and monitoring and evaluation stages. A matrix shows the relation of objectives and achievement levels (Table 12).

The following steps are involved in the goal attainment scaling process:

1. Fill in the column headings with the specific objectives for the solution.
2. Give each objective a weight, expressed as a decimal fraction, according to its relative importance; higher weights indicate more importance. The sum of the weights should be 1.
3. Select one or more criteria to define a scale or means of measuring the accomplishment of each objective. Use these criteria to determine achievement levels.
4. State the current level of achievement for each objective where appropriate.
5. Describe achievement levels for each objective to complete the interior of the chart. Begin with

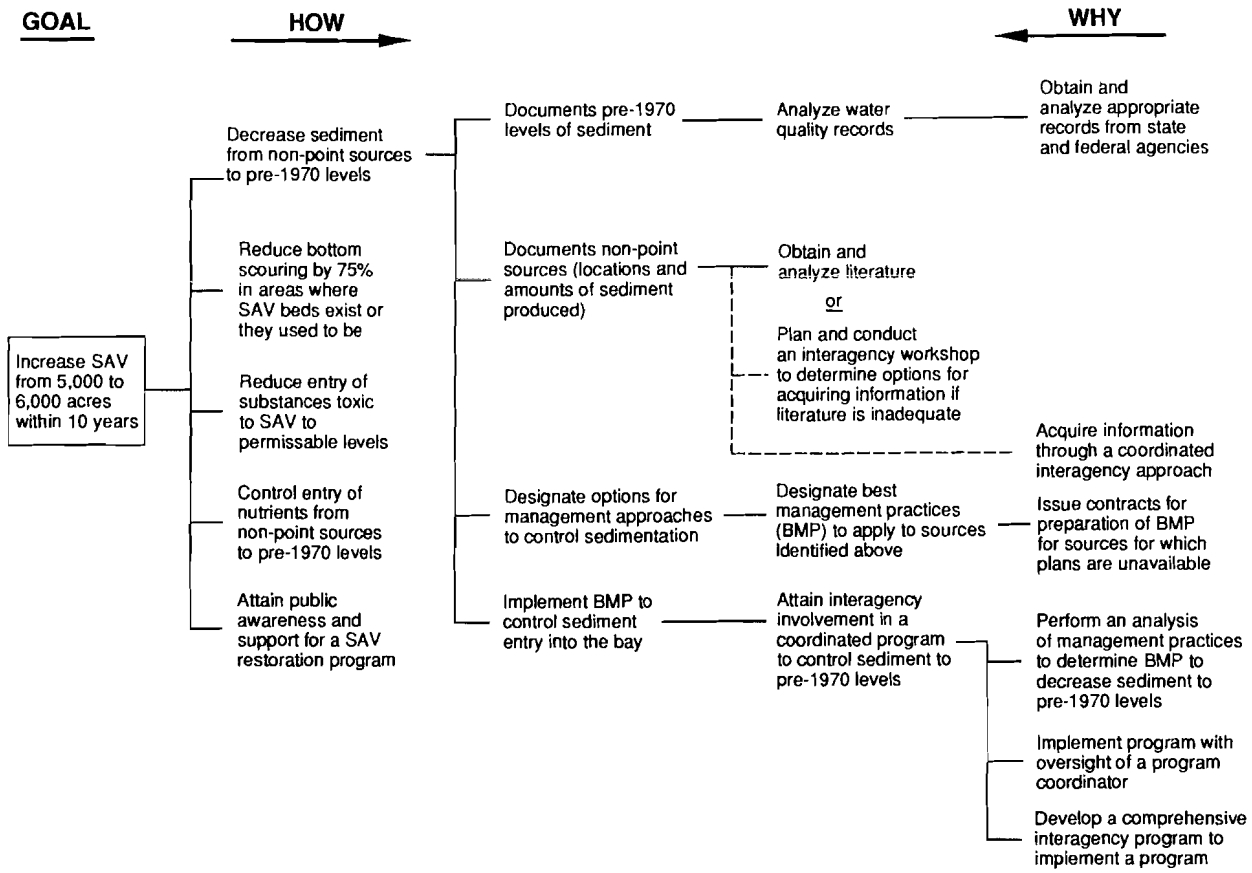

Fig. 9. Functional analysis systems technique example. Modified from Armour et al. (unpublished manuscript).

Table 12. *Goal attainment scaling table format.*

Achievement levels	Objective 1	Objective 2 Relative weight	Objective 3 Relative weight
Much better than expected +2			
Better than expected +1			
Expected outcome 0			
Worse than expected -1			
Much worse than expected -2			
Present conditions			

the expected level in the center row, then define higher and lower levels of achievement, expressing each as a range of numerical values if possible. If a numerical objective cannot be expressed, describe each attainment level as specifically and meaningfully as possible.

6. Review the results and indicate the level achieved for each objective.
7. To find a numerical score, multiply the relative importance weight by the numerical value of the achievement level for each objective. A score of 0 indicates the outcome was as expected, a negative score indicates a worse than expected outcome, and a positive score indicates a better than expected result.

We show a goal attainment scaling chart completed for the planning of a project to develop a self-sustaining fishery (Table 13). The limiting factors are available spawning habitat area, per-

Table 13. *Goal attainment scaling example.*

Attainment levels	Objectives		
	1. Increase available spawning area[a]	2. Reduce silt in rearing areas[b]	3. Decrease water temperature[c]
Much better than expected +2	90–100 square feet per mile	<10% fines maximum	63° F weekly
Better than expected +1	80–90	10–15%	64° F
Expected outcome 0	70–80	15–20%	65° F
Worse than expected -1	60–70	20–25%	66° F
Much worse than expected -2	50–60	25–30%	67° F
Present conditions	50	30%	67° F

[a] Relative weight: 0.3.
[b] Relative weight: 0.3.
[c] Relative weight: 0.4.

cent of fines in the stream bed, and high water-temperatures. The objectives listed at the top of the chart address these conditions. As discussed earlier, these objectives need to be supported by evidence that shows how they will lead to creation of a self-sustaining fishery. When using goal attainment scaling, the rationale used to assign relative weights of the objectives also should be documented.

To use this chart as an evaluation tool after the project has been completed, mark the levels achieved on the chart, and calculate the resulting score. For example, if the spawning area was increased to 85 square feet per mile, the silt reduced to 17% fines in the stream bed, and the maximum weekly temperature reduced to 66° F, the evaluation score would be computed

85 square feet per mile: $+1 \times 0.3 = 0.3$
17% fines: $0 \times 0.3 = 0$
66° F max. temperature: $-1 \times 0.4 = -0.4$
Total: -0.1

The final score is less than 0, indicating the outcome was slightly worse than anticipated.

Because the goal is to establish a fishery, a fish count could be used as an indication of success. A count may not reflect how well the objectives were accomplished, however, as many factors outside the scope of the project, such as natural variation, higher than expected fishing pressure, and natural and human-made disasters, can affect the fish population. A more direct measure of the specific field responses is needed to supplement population information to evaluate project success.

Identification of Alternative Solutions

The previous stages focused on defining and clarifying a problem, but we now focus on generating ideas for potential solutions. We are seeking ideas at this stage, not complete solutions. Ideas, the seeds of solutions, indicate approaches and not a finished product. The goal of the alternative identification stage is to make the group aware of as many diverse ideas as possible. People tend to judge ideas as they are presented, or to limit expressions to relatively complex, tentative solutions rather than offer raw ideas. Judgment and evaluation must be deferred in order for individuals to feel uninhibited about presenting ideas.

The techniques presented in this section encourage creative thinking. It is often helpful to step back from the problem, to think of something seemingly irrelevant, in order to free ourselves from predictable, traditional approaches.

Brainstorming

Brainstorming is probably the most widely known and used method of generating ideas. The classical brainstorming technique has been modified and adapted many times since its introduction by Osborn (1963). VanGundy (1984) presented an overview and description of 15 variations on brainstorming and brainwriting, a similar approach where individuals write down their ideas rather than express them aloud to the group. Nominal group technique is a type of brainwriting. The rules of classical brainstorming are as follows:

1. no criticism of ideas is allowed;
2. irreverent ideas are wanted, the wilder the better;
3. quantity is the goal because more ideas lead to better solutions; and
4. combining and improving on ideas is desirable.

During a brainstorming session, the leader presents a question or problem that has been previously defined, explains the rules, and perhaps conducts a warm-up exercise. The group then brainstorms, offering ideas as they occur or in a round robin with a pass option. The role of the leader is crucial to a successful brainstorming session. The leader must have a clear grasp of the problem and its dimensions, as well as experience with the brainstorming technique. The leader must be able to maintain a positive, problem-focused meeting, while encouraging a relaxed and creative atmosphere. After brainstorming, another technique, such as nominal group, can be used to reach agreement on important ideas for additional analyses (e.g., ranking the priority of items).

Synectics

Synectics is a structured variation of brainstorming developed by Gordon (1961) and Prince (1970). Synectics seeks to draw out the natural creative problem-solving skills of group members and limit the inhibiting bad habits, such as the need for precision, censorship, and concern for others' opinions. This technique emphasizes flexibility and the departure from usual thought patterns. It encourages active listening to understand the speaker's perspective rather than evaluating others' statements. Figure 10 shows an outline of the basic structure of a synectics session.

The synectics process begins with a description of the problem—problem as given. Next, an expert close to the problem and with a good understanding of its various aspects explains the issue—expert analysis. After the problem is introduced, give the group the opportunity to air any immediate suggestions or ideas. It is too early in the process to consider potential solutions, but if these first responses are not expressed, it may be difficult for the group members to think of anything else. A brief discussion of the group's reactions also leads to a better understanding of the problem.

During the goals as understood step, each group member identifies his ideal solution to the problem. Instruct the group members to pursue wishful thinking and not limit themselves to the range of options they believe possible. Ask the group, "If you could have anything (in regard to this problem), what would you want?" The goal of this step is to identify what the ultimate situation would look like, without regard for what is considered realistic. Write all goals offered on a flip chart. At the end of this step, select an appropriate goal that meets the approval of the expert. Choose the group goal in a way that divides the problem into manageable parts and focuses group efforts on a specific aspect. The following is an example of the first three steps of a synectics analysis:

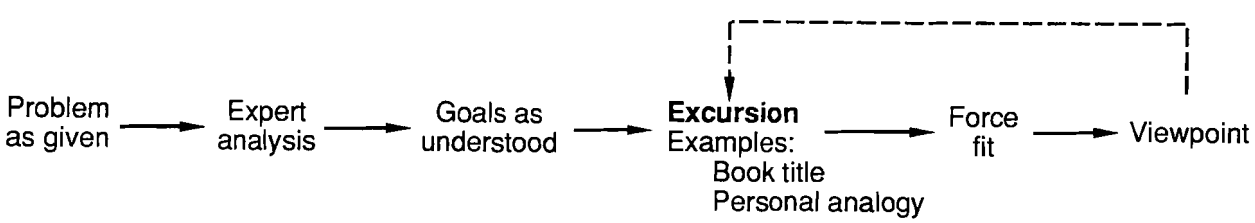

Fig. 10. Steps in a synectics analysis.

1. Problem as given—how can biologists be more effective at negotiating?
2. Expert analysis—one factor that contributes to the problem is that some biologists lack the following skills:
   a. an understanding of the negotiation process,
   b. an understanding of the role of compromise,
   c. an understanding of the role of scientific information in decision-making and negotiation processes,
   d. the ability to deal with intervening considerations when they supercede scientific information in decision making,
   e. the ability to use and interpret nonverbal communication, and
   f. the ability to convey the impression of competence and professionalism when attempting to influence the perceptions of others.
3. Goal as understood—prepare biologists to be more effective in influencing decisions in negotiations.

The next step, the excursion step, is the major innovation of the synectics technique. As the leader, ask the group to put the problem and goals out of mind. Encourage creative thought by introducing a new, seemingly irrelevant, context. Pose a question that requires an analogical or metaphorical response. Instruct the group to explore one or more methods of developing an analogy. The group compares facts, knowledge, or technology of a phenomenon, product, or situation that is structured similarly to the problem. The greater the logical distance between the problem and the analogous situation, the more likely new and interesting thoughts will be stimulated.

The book title analogy consists of developing two-word phrases that capture the essence and paradox involved in the analogous situation in a poetic, aesthetically pleasing way. Choose one of the book titles offered and then ask the group to think of other examples that it implies.

In the personal analogy, ask group members to identify with an object and describe how they feel. These techniques explore the unique thoughts of group members and the conflicting emotions surrounding the problem to produce creative, innovative ideas.

Force fit, the step after the excursion, brings the focus back to the problem. Use the creative thoughts produced during the excursion to develop meaningful approaches to solving the problem. During the force fit stage, use the qualities developed during the excursions to develop a list of corresponding qualities that relate to the goal as understood. This bridge may occur spontaneously when a group member makes an association between the analogy related information and the problem that leads to a possible solution. If necessary, encourage the process by making a connection between the problem and a statement made during the excursion. The group may need a more structured approach to force specific ideas from the analogy into the problem situation if it has a difficult time developing possible solutions.

The final step in the process is to develop a viewpoint, or tentative solution statement. A viewpoint for the example could be to develop the skills listed in the force fit into training programs, reference materials for self-education, and other resources available to biologists. Repeat the excursion and force fit steps until several viewpoint statements are developed. The expert should review each viewpoint to ensure it expresses some new and promising elements. At this time, point out further investigations needed to indicate the validity of each approach.

In our example, an excursion using a luxury car as the analogy was used first. Qualities of a luxury car are as follows:

1. comfortable,
2. dependable,
3. impressive appearance,
4. powerful engine,
5. easy to operate all controls,
6. minor malfunctions do not keep car from operating,
7. status image,
8. quality service and repair work available,
9. durable,
10. retains value,
11. spacious, and
12. wide range of options available.

A book title excursion followed the first excursion, and *Luxurious Transport* was chosen. Examples that fit this book title include first class travel on a transcontinental flight, riding in a chauffeured limousine, and a cruise on a luxury ocean liner. Qualities associated with a book title for a

luxury ocean liner cruise used to move the conscious thought farther from the original problem include the following:

1. all services and needs available on board;
2. range of entertainment and activities;
3. designed for catering to expectations of luxury;
4. lack of stressful distractions;
5. know what to expect, designed to avoid unwelcome surprises;
6. structured schedule;
7. ports of call are interesting and exotic;
8. range of accommodations to meet ability of individuals to pay, yet maintain aura of luxury;
9. travel established routes to minimize disruptive and dangerous risks;
10. opportunities to meet interesting people;
11. stark break from daily routines and stresses; and
12. wide choice of commercial carriers available.

After all the information is developed, group members consider it in the force fit stage to recommend what should be done to achieve the goal. For example, the following list was compiled with use of preceding information to represent achievements for biologists to improve negotiation effectiveness:

1. prepare and document strategies and supporting information in advance;
2. have supporting documentation fully accessible for rapid and effective use;
3. present information in an interesting form and context meaningful for all parties;
4. understand the negotiation process, with an ability to respond to a variety of contingencies with a flexible approach;
5. understand the interests and positions of all parties;
6. remain focused on issues;
7. be able and respond effectively to thwart potentially disruptive developments or tactics;
8. work within established schedules and meet deadlines;
9. be cognizant of and be able to work with different abilities and approaches of other individuals;
10. be open to ideas and needs of others;
11. use the negotiation experience to develop positive professional relationships and consider negotiation an interesting challenge;
12. schedule negotiations so disruptions do not occur and daily demands do not interrupt the process;
13. be receptive to a wide variety of analytical methods, expert advice, and skills that are available;
14. recognize the role and importance of constructive compromise in decision making;
15. become comfortable with negotiations;
16. develop a reputation of being a well prepared, stable professional, committed to equitable solutions;
17. dress for success, maintaining a professional image;
18. be well prepared and known for strength in respect to possessing powerful supporting information;
19. be prepared to persevere by maintaining a positive mental outlook and good physical condition; and
20. develop a reputation of credibility and consistency, motivated by principles and substance.

Delphi Technique

The Delphi technique, described in detail by Delbecq et al. (1975), is used to solicit judgments of experts on a particular topic. A series of written questionnaires is used rather than face-to-face meetings. The Delphi technique is particularly appropriate when it is not feasible to bring the involved people together. The basic steps involved in a Delphi survey are as follows:

1. compile a list of recognized experts as potential respondents;
2. prepare an initial questionnaire and send it to those on the list;
3. the experts respond to and return the questionnaire;
4. summarize responses in a feedback report;
5. prepare a second questionnaire and send it to those who answered the first questionnaire;
6. respondents review and evaluate the summary report, then reply to the second questionnaire (steps 4, 5, and 6 are repeated as necessary);
7. respondents may be asked to rank items or vote on the issues brought out in the survey; and
8. the Delphi monitor prepares and delivers a final report.

Ensuring quality results requires participants to have high motivation and written communication skills. A significant amount of time also is required to conduct a Delphi survey, usually a minimum of 45 days.

Several decisions must be made by those conducting the Delphi survey: Will respondents be assured of anonymity? What types of questions will be asked? How many iterations of feedback and questionnaires will be allowed? How will the individual responses be used to arrive at a final decision?

Solicit nominations of experts to develop the list of respondents. Add to the list individuals suggested by these nominees. A diverse respondent group is desired to obtain a broad range of responses; however, group size must be limited to a manageable number. If the respondent group is relatively homogenous in background and experience, 10 to 15 individuals generally identify as many ideas as larger numbers (Delbecq et al. 1975). However, more people may need to be included to meet other goals of the survey, such as disseminating information or generating support and interest.

Preparing a Delphi questionnaire is similar to preparing a nominal group question. The problem must be clearly understood and the information to be gained from the survey specifically defined. The initial questions are usually broad. Succeeding questionnaires narrow the scope and build on the previous responses. The responses to each questionnaire, summarized and sent back to the respondents, clarify points of agreement and disagreement. The Delphi process continues until consensus is reached or a sufficient exchange of information has been accomplished.

The Delphi process has been described and used to develop habitat suitability index curves for a variety of fish species (Crance 1985, 1987a,b, 1988).

Screening Techniques

Use screening techniques to reduce the list of potential solutions to a manageable number. Develop a minimum of two or three distinct solutions into detailed proposals for formal evaluation. Combining similar ideas is a useful first step in reducing the size of the list. Also, combining dissimilar ideas may produce an innovative solution that contains the strengths of two different approaches. Organize ideas into categories. Eliminate those unlikely to produce a practical solution. It may be possible to refine one or two high quality ideas from each of the remaining categories.

Several simple evaluation methods can be used to sort through the list of solutions. Have group members rank the ideas, listing their top five choices by giving a vote of 5 to the top choice, 4 to the second, and so on. Tally the votes and keep the high-scoring ideas for further elaboration and evaluation. A variation of this method is to give members a certain number of points to be distributed among ideas as they choose. Group members can assign all their points to one idea or divide their points between ideas any way they wish. Use the nominal group technique to select ideas for further consideration.

Another method of comparing ideas is to list the advantages and disadvantages of each. Weigh the relative importance of each advantage and disadvantage and eliminate those ideas with the most disadvantages and least advantages. Assign a person to act as an advocate for each idea as another means of promoting the group's deliberation. After all ideas are discussed, retain those with the most promising qualities. Also, develop a list of necessary criteria and eliminate ideas that do not meet the requirements. However, an idea may be kept if it can be modified to meet the designated criteria. The difficulty in screening ideas is to reduce them to a number that can realistically be considered yet not eliminate ideas just because they are unusual.

There are limitations to voting and averaging scores. For one, dominant individuals can intimidate others to support their point of view, masking all others. Averaging ranked scores also can mask the group's true views if wide discrepancies exist. For example, if two experts assigned respective scores of 0 and 100, the average would be 50. The wide range of opinion expressed in the original scores probably means that the average would be unacceptable to both parties. However, if the experts' scores were 45 and 55, the average of 50 more accurately reflects the collective opinion. One option for evaluating the degree of agreement or variance of expert opinion is to use rank correlation (Kendall 1962). Averaged results could be accepted if, for example, a previously determined

level of agreement (e.g., 75%) exists (Armour and Williamson 1988).

Evaluation of Alternatives

The evaluation stage of problem solving is the most studied and developed stage. Many techniques for evaluating and ranking alternative solutions have been developed in the fields of decision analysis, economics, and behavioral psychology. Because literature on this topic is abundant, this section serves only as an introduction. Three evaluation methods are described. Ordinal ranking provides a structured process for comparing alternatives; however, decision criteria are implicit and intuitive. Decision trees consider the uncertainty of future events. Multiattribute utility analysis allows decision makers to rank alternatives based on values and preferences relative to several decision criteria.

The purpose of evaluation techniques is not to automatically make decisions, but to provide insight into the rationale for the complex choices involved. Evaluation techniques focus on only a part of the problem; no method can measure or assess all the factors relevant to the final decision. Judgments by decision makers are required when applying a method, and a high score may not ultimately indicate the best choice. Decision analysis techniques can also illustrate the value of additional information or help identify and resolve areas of conflict.

The use of formal evaluation techniques to analyze environmental problems is increasing. Applications include the analysis of decisions concerning development within areas under the jurisdiction of the California Coastal Commission (Gardiner and Edwards 1975), control of a forest pest (Bell 1977; Holling 1978), analysis of marine mining (Lee 1979), and evaluation of regional environmental systems (Seo and Sakawa 1979; Keeney 1982). Maguire (1986) and Maguire et al. (1987) applied decision trees and probability analysis to the management of endangered species. Dean and Shih (1975) documented the application of multiattribute utility analysis to the choice of a water supply for San Angelo, Texas. Ulvila and Snider (1980) described the use of similar techniques in the negotiation of international oil tanker standards.

Ordinal Ranking

Ordinal ranking is a simple technique (Erickson 1981) using pairwise comparisons to rank alternative solutions. The steps involved are as follows:

1. Arbitrarily order and label the alternatives (e.g., A, B, C, D, E, F in Fig. 11).
2. Create a triangular chart for making pairwise comparisons as shown in Fig. 11.
3. As a group, discuss pros and cons of each pair and decide by consensus the choice to circle. Both are circled if they are equally important.
4. For each alternative, record in the frequency column the number of times it is circled in the comparison chart. Indicate the preference ranking among the alternatives in the third column. The alternative with the highest frequency receives the number 1 ranking, and so on.

The ordinal ranking technique is a way to rank multiple alternatives. Distinguishing between alternatives that tie is an obvious difficulty with the technique, and this indicates that human judgment must be applied before making decisions, regardless of the technique that is used. Another use of the technique is to determine weights for decision criteria for use in a multiattribute analysis (C. L. Armour, R. L. Johnson and M. C. Watzin, unpublished manuscript); ordinal ranking is used to determine weighting values for decision criteria before alternatives are evaluated and ranked.

Decision Trees

Decision trees deal with the uncertainty involved in the decision-making process. Although the decision tree technique revolves around a schematic diagram, its usefulness depends on an accurate analysis of the problem and potential solutions, rather than on the mechanical construction of the diagram. The decision tree itself represents decision alternatives, uncertain events, and possible outcomes. An effective diagram captures the essence of the problem, showing the most important elements in a simple display that is quickly understood. Supporting models can be used to develop the level of detail needed so the main decision tree does not become overly clut-

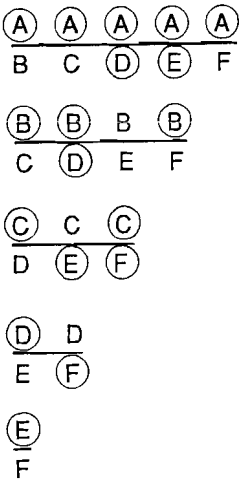

Comparison chart	Alternative	Frequency	Ranking
	A	5	1
	B	3	2
	C	2	3
	D	3	2
	E	3	2
	F	2	3

Fig. 11. Ordinal ranking comparison example.

tered and confusing. The creation of a simple, comprehensible tree forces decision makers to separate the problem into components and specify those that are most significant. Attitudes regarding risk, preferred outcomes, and their interrelatedness are brought out. The format of a simple decision tree is shown in Fig. 12.

A decision tree is constructed with three types of nodes and interconnecting lines called branches. Square nodes represent a decision and are followed by decision alternative branches. Circles or uncertainty nodes indicate possible future events or states of nature and are followed by outcome branches with their respective probabilities of occurrence. Triangular or terminal nodes designate the end of a possible decision path and are followed by consequence or final outcome twigs. Each path from the first decision node to a final consequence represents a different combination of choices and events. Use the following steps to create a decision tree:

1. Represent the first or primary decision by a square at the left of the diagram, draw a radiating line for each alternative, label each alternative, and indicate cost if appropriate.

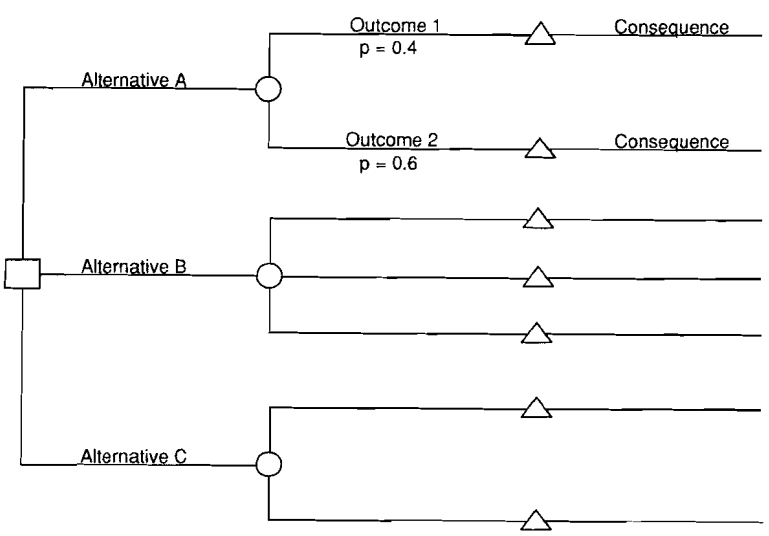

Fig. 12. Decision tree format.

2. Place a circle following each alternative line to indicate a future event; label lines radiating from these circles with possible outcomes and their probabilities of occurrence; assess these probabilities one node at a time, and sum the probabilities for each node, which is the probability of the event occurring. Most commonly, the event, or one of the outcomes, is certain to happen, so the sum of the possible outcome probabilities should equal 1.0.
3. Complete the diagram by adding decision and event nodes to the right as needed to represent the problem. Events with a low likelihood of occurrence, or those that do not have a significant impact on the decision, should be eliminated from the diagram.
4. At the end of the diagram, each path is completed with a terminal node followed by a brief description of the consequences or outcome of that branch.

To analyze the decision tree, work from right to left. To calculate the probability of each final consequence, multiply the probabilities on its path. If more than one path results in the same consequence, add the final probability products for these branches to determine the probability of the consequence.

Decision trees have been used in the management of endangered species. The example in Fig. 13 (Maguire 1986) illustrates the choice between managing a species as a single larger population or as two smaller populations, where there is a threat of a severe storm that would lead to extinction. If the storm does not hit, the population is subject to the probability of extinction due to usual environmental variations. Maguire (1986) describes the dilemma facing the manager:

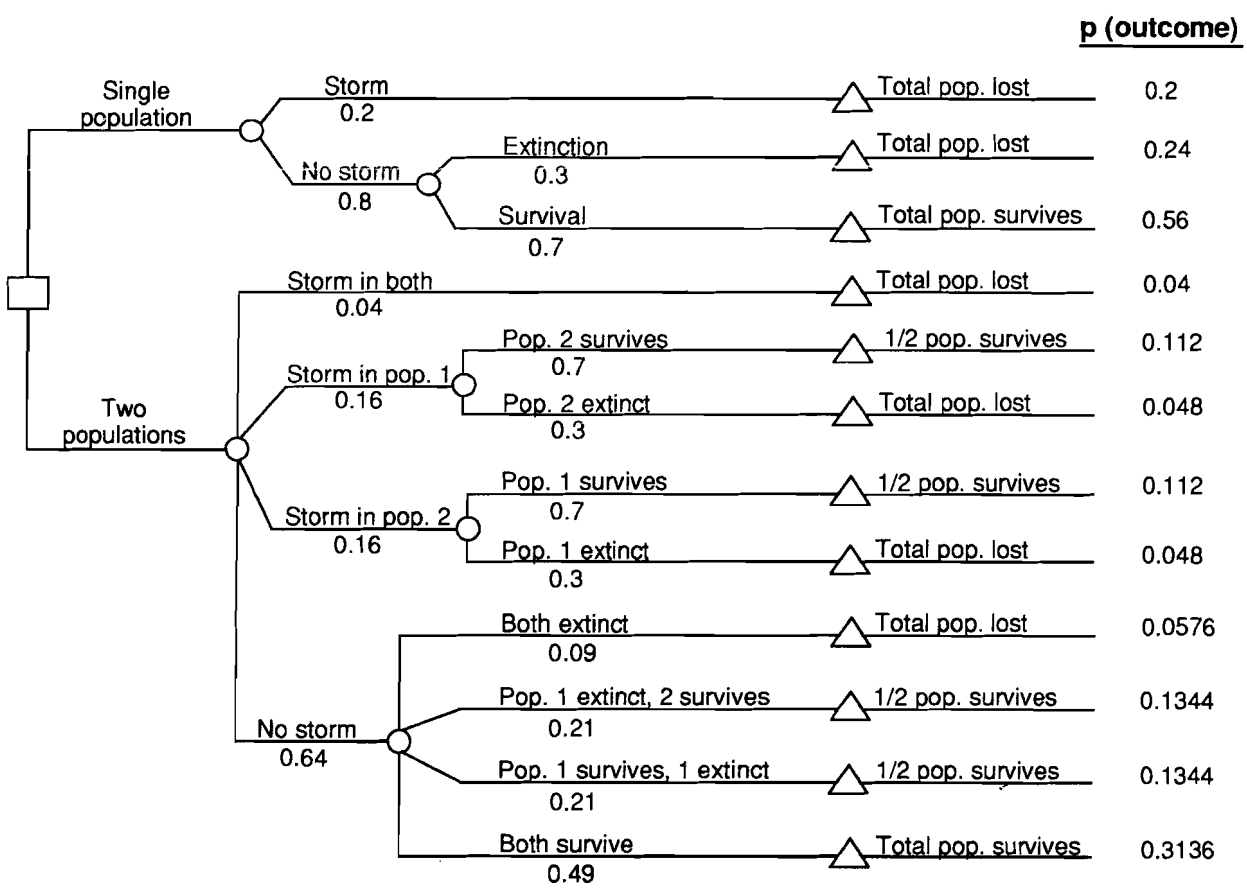

Fig. 13. Decision tree for choice of managing an endangered species in one or two populations (adapted from Maguire

If a severe storm does not occur, the species will be better off in a single larger population, but if a storm does occur, it will probably be better off in two smaller populations. A rational way to choose between these alternatives is to calculate the management action with the lowest expected value of *PE* (probability of extinction).

To calculate the probability of extinction for a single population, add the total population lost outcome probabilities in the single population branch (0.20 + 0.24 = 0.44). The probability that a single population survives is 0.56. Similar calculations are made to determine the probabilities of survival and extinction if the population is divided into two groups, as shown below:

Two populations:

P(total pop. lost)	= 0.04 + 0.048 + 0.048 + 0.0576 = 0.1936
P(½ pop. survives)	= 0.112 + 0.112 + 0.1344 + 0.1344 = 0.4928
P(total pop. survives)	= 0.3136 + (0.112)(0.112) = 0.326
P(survival)	= *P*(½) + *P*(total) = 0.4928 + 0.3136 = 0.8064

Decision makers are cautioned about distinguishing between close values because input probabilities are rarely more than educated guesses. Sensitivity analyses can be conducted by varying the input values and recalculating the probabilities to observe their effect on the final decision. For a more in-depth discussion of decision trees see Behn and Vaupel (1982). Keeney and Raiffa (1976) provide a detailed presentation of choices under uncertainty.

Multiattribute Analysis

Multiattribute analysis is a technique that allows evaluation of alternatives using several attributes or decision criteria. If, for example, specific objectives or characteristics of an ideal solution were identified earlier in the problem-solving process, the decision makers may want to judge the proposed alternatives according to how well they satisfy these criteria. Multiattribute utility or value functions provide a means of making that judgment. A simpler evaluation method may be sufficient to sort out the relative quality of alternative solutions if one solution seems to be the best. However, if the decision criteria conflict so that no single alternative seems best, multiattribute analysis can be useful to evaluate which alternatives are preferred and why.

This technique also helps quantify the decision makers' preferences and values, helps clarify a complex decision, and provides documented justification for the choice. It helps ensure that important information will not be neglected. This systematic approach helps the decision makers' understanding of what constitutes a good solution and improves acceptance of the final choice. The result is a better quality decision that promotes efficient and effective use of environmental resources.

A multiattribute utility or value function uses weights for each criterion to reflect the values of the decision makers. To be effective, decision criteria should be defined in specific terms and quantified if possible (see the section *Defining Goals and Objectives*). Alternatives are rated according to the decision makers' preferences relative to each criterion or attribute. Weights are used to represent the relative importance of the criteria; ratings represent the relative preferences between alternatives. A total score for each alternative is calculated by summing the weighted ratings. Thus, the relative significance of the decision criteria is defined, and strengths and weaknesses of the alternative solutions are explicitly quantified.

Table 14 shows a format for conducting a multiattribute analysis. The steps to define a multiattribute utility or value function (Ulvila and Snider 1980; Erickson 1981) are as follows:

1. List the criteria to be used in judging the alternatives. It may be helpful to distinguish between those that are essential versus desirable. Alternatives that do not meet essential criteria can be eliminated.
2. Assign a weight to each criterion through a pairwise comparison exercise.
3. Rate each alternative against each criterion. Describe attributes of each alternative that correspond to each criterion as specifically as

Table 14. *Multiattribute analysis example.*

Criterion (weight)	Rating (weighted rating) for each alternative 1	2	3	4	5
1 (5)	2 (10)	-2 (-10)	1 (5)	1 (5)	1 (5)
2 (3)	2 (6)	-2 (-6)	2 (6)	2 (6)	1 (3)
3 (2)	3 (6)	-2 (-4)	3 (6)	1 (2)	2 (4)
4 (3)	1 (3)	-2 (-6)	2 (6)	1 (3)	-1 (-3)
5 (3)	1 (3)	-2 (-6)	1 (3)	1 (3)	1 (3)
6 (2)	2 (4)	3 (6)	2 (4)	2 (4)	1 (2)
Total weighted score	(32)	(-26)	(30)	(23)	(14)

possible. After descriptively rating the alternatives, assign numerical ratings (a higher number indicates a better rating). Four possible ways of rating are as follows:

a. use descriptive categories to assign weights (e.g., excellent = 5, very good = 4, good = 3, fair = 2, poor = 1);
b. use a 1 to 10 scale, where 10 is the highest rating and 1 is the lowest;
c. if quantifiable numeric values are known, calculate normalized values for unitless ratings—

when a high value is desirable for the criterion...

$$\text{rating} = \frac{\text{value for rated alternative}}{\text{value for best alternative}} \times 10$$

when a low value is desirable for the criterion (e.g., cost)...

$$\text{rating} = \frac{\text{value for best alternative}}{\text{value for rated alternative}} \times 10;$$

this results in a unitless, 1 to 10 scale rating—because a high rating is always desirable, it is essential that the normalized values be computed correctly; or

d. use a -3 to +3 scale, where 0 is neutral, 1 is low, 2 is moderate, and 3 is high (positive numbers indicate favorable ratings and negative numbers indicate unfavorable ratings).

4. Calculate weighted ratings by multiplying the criterion weight by the rating for each alternative and criterion.
5. Sum the weighted ratings for each alternative to calculate the total score.
6. Total scores indicate the rank of the alternatives relative to the criteria and ratings (values and preferences) used.

As a hypothetical problem to demonstrate use of the technique, consider a goal to increase the abundance of submerged aquatic vegetation (SAV) from 2,025 to 2,430 ha (5,000 to 6,000 acres) in a coastal bay, within 5 years. Six criteria are used to judge the potential approaches to solving this problem:

1. level of confidence that the action would benefit the resource to achieve the stated objective, based on analytical information;
2. practicality;
3. technical feasibility;
4. political and social acceptability;
5. availability of funds to perform work; and
6. practicality of monitoring results to evaluate the effectiveness and to make mid-course corrections if necessary.

These are only examples; appropriate criteria must be established for each actual analysis. Use pairwise ordinal ranking frequency scores to determine criteria weights. Figure 11 shows how the pairwise weights are established. Establish weights through a group exercise instead of permitting each individual to rank followed by averaging or totaling of scores to obtain final weights. Alternative solutions proposed for achieving the goal were as follows:

1. reduce agricultural runoff through application of best management practices to lessen turbidity by 25% during April through August,
2. plant and maintain 405 ha (1,000 acres) of aquatic vegetation in the bay,
3. decrease toxic waste entry to the bay by 60% through improved waste disposal in the watershed,
4. reduce nutrient entry by 75% through better agricultural management practices to diminish turbidity caused by phytoplankton by 15%, and
5. manage pleasure boat traffic to decrease scouring action in weed beds by 35%.

Evaluate the alternatives with use of criteria using a -3 to +3 scale. Criteria weights and alternative ratings are multiplied to calculate the weighted ratings. The total score for each alterna-

tive (Table 14) is the sum of the weighted ratings. In this example, alternatives 1 and 3 both appear to be good choices. The two-point difference in scores may not be decisive. Use caution when discriminating between such close scores and accept that human judgment, not numbers, must be the basis for a final decision.

Because multiattribute analysis is time consuming, it is best used when the list of alternatives has been reduced to a few finalists. Sometimes the highest scoring solution may not seem the right choice to the decision-making group, yet no specific reason can be identified. In that instance, reexamine the ratings and weights to ensure that they accurately reflect the group's preferences. Add decision criteria if other factors have a significant influence on the choice.

In a group setting, it may be difficult to reach a consensus on the weights and ratings. If so, voting procedures can be used, or the leader may make the final numerical assignments after considering the opinions of the group members. However, if individual scores are simply averaged, the analysis will be less comprehensive and more subjective. At a minimum, group members should have the opportunity to debate viewpoints to reach an informed group decision. A score other than the average might be agreed on after individual positions are explained. Diverse differences of opinion highlight the need to carefully consider and debate all viewpoints before assigning a final weight or rating. Approaching a consensus may be difficult in a group with substantial value differences. However, multiattribute analysis can be useful in identifying the points of agreement and conflict.

Multiattribute analysis has potential limitations. Double accounting can occur when the criteria used in the decision process are related. If that happens, weighted scores for these criteria influence the final results more than the scores for other criteria that are only represented once. Therefore, it is important to designate criteria that are discrete and independent. If this is not feasible, note and flag related criteria for review when a final score is assessed. When a mathematical approach is used, some individuals may erroneously assume that the method is precise and foolproof. Take care to apply sound judgment when assigning criteria weights and ratings. We recommend documenting how ratings are linked to specific alternative attributes and explaining the reasons for criteria weights. Although multiattribute analysis encourages and enhances objective decisions, subjective judgments are involved. Subjective judgments masked by numerical values can create a false sense of security. Decisions should not rely solely on analytic scores. These numbers are guides, not irrefutable facts. Regardless of potential limitations, a structured, documented, and collaborative process should result in better decisions if care is taken in all steps of the analysis.

Examples of environmental applications of multiattribute analysis include the choice of a supplemental water supply source for San Angelo, Texas (Dean and Shih 1975), and the negotiation of international oil tanker standards (Ulvila and Snider 1980). *Decisions with Multiple Objectives* by Keeney and Raiffa (1976) is the definitive text on this subject.

Developing a Management Plan

The management plan contains the specific information needed to bridge the gap between a good idea and a successful management program. Once the alternative (or alternatives) to be used is selected, identify the details necessary to implement the solution. For implementation, prepare specific, quantified objectives, specify activities and tasks, identify responsible groups or individuals, and draft a schedule.

Implementing a solution usually means causing a change in the way things are done. Because most people are at least somewhat resistant to change, selling the idea or gaining support for a new program is usually necessary. VanGundy (1984) described an approach for actively soliciting support for a program being prepared for implementation:

1. involve those affected in the entire problem-solving process,
2. be specific about proposed changes,
3. stress the benefits to be gained,
4. create shared perceptions about the need for change, and
5. gain support of key opinion leaders.

Among the factors VanGundy (1984) suggested considering when assessing the potential resis-

tance to a proposed solution are the degree of external involvement required, the extent of the effects, the magnitude of the change, whether the change was requested by those who will be affected, and the effect of the change on attitudes. Unrequested changes and programs implementing broad changes that affect many people are likely to meet the most resistance and require the greatest amount of participation in the planning process. Especially under such circumstances, make the effort to include persons representing all affected interests in the entire problem-solving process. An inclusive rather than exclusive planning group will help ensure that a realistic and acceptable solution is developed, and the broad base of support developed will be a big step towards successful implementation. An interdisciplinary effort is almost always required to develop an environmental resource management plan that is practical and technically feasible. Management of multiuse areas, especially, requires coordination with other plans and interests to meet the objectives for fish and wildlife habitats.

The management plan should be as specific as possible about the proposed changes. A clear description makes it easier for those implementing the plan to carry it out and encourages public support. Vague information and ambiguous messages are likely to raise suspicions and make the chances of successful implementation remote. Emphasizing the positive by stressing the benefits of the program and encouraging a common perception of the need for a change also helps develop support for implementation efforts. The support of influential leaders also can promote broader acceptance of the program.

Seven general steps are involved in preparing a management plan (adapted from VanGundy 1984):

1. develop and evaluate goals and objectives,
2. assess resources,
3. define activities and tasks,
4. assign groups or persons responsible for each task,
5. estimate time for each activity,
6. schedule activities, and
7. assess implementation strengths and weaknesses.

There must be a specific goal for the overall program. Review the original goals; they may now seem too ambitious, too conservative, or need some modification. The implementation goal should be consistent with the original goals, but may need to be more precise. A meaningful goal should express in measurable terms what will be accomplished and when it will occur; for example, "submerged aquatic vegetation abundance will increase from 2,025 to 2,430 ha (5,000 to 6,000 acres) within 5 years," or "riparian vegetation will increase resulting in a 3° C reduction in water temperatures during the hottest part of the summer." Similarly, design specific objectives that provide a measure of success for each action that will be implemented.

Review the resources of time, money, and personnel available for implementing the program. Realistic schedules that avoid over-committing resources are more likely to produce the intended results. Clearly define the procedures to be used in implementation activities, including quality control measures. Name those responsible for carrying out each element of the plan, and specify the details of coordination between the people and agencies involved. Establish a clear line of responsibility so the management plan is properly implemented in a timely manner. An acceptable management plan (adapted from Armour et al. 1988) should

1. define a clear project objective for solving the problem;
2. identify the overall indicator or measure of project success;
3. explain the importance of each action item and identify the measure of effectiveness;
4. specify details on the sequence and timing of actions;
5. clearly describe exact requirements of resources (funds, personnel, equipment), including who will provide what, and when it is needed;
6. clearly define responsibilities for implementing actions and carrying out all activities in the plan;
7. describe each action in the plan in sufficient detail to avoid confusion about what is to be done and what results are expected;
8. specify quality control and monitoring requirements and procedures, including definition of

specific roles and responsibilities of the project cooperators;

9. define the procedures and responsibility for overall project coordination; and
10. require agreement and approval of the final plan by all those cooperating in program implementation.

Several scheduling methods have been developed to help organize the planning process. For relatively straightforward programs, Gantt charts and flow charts can be used to illustrate and organize the implementation process. For complex projects, the program evaluation and review technique (PERT) is helpful.

Gantt Charts

Gantt charts, also called time and task analysis (Erickson 1981; VanGundy 1984), are used to organize time and sequencing requirements of tasks for planning and controlling implementation. Start times, expected durations, and completion dates of all essential activities are included in an easy-to-follow diagram. They clearly show the latest time each action can begin without causing delays to the project.

The following steps are used to construct a Gantt chart (Erickson 1981; VanGundy 1984):

1. List every task that must be completed to implement the management plan. Be specific and try not to overlook small tasks that might be crucial to accomplishing more significant activities.
2. Determine a target completion date and estimated duration time for each task. Avoid underestimating the time required; tasks often take longer than originally anticipated.
3. Specify the target completion date for the entire project. Be as realistic as possible.
4. Draft the chart, listing activities chronologically by completion dates.
5. Plot the duration bars for each task. It may be easiest to begin at the project completion date and work backwards, fixing the completion dates of preceding tasks.

Figure 14 shows a Gantt chart for planning a field study. Time is indicated from left to right along the horizontal axis, which is scaled to span the length of the project from beginning to completion. The tasks involved in the implementation of the

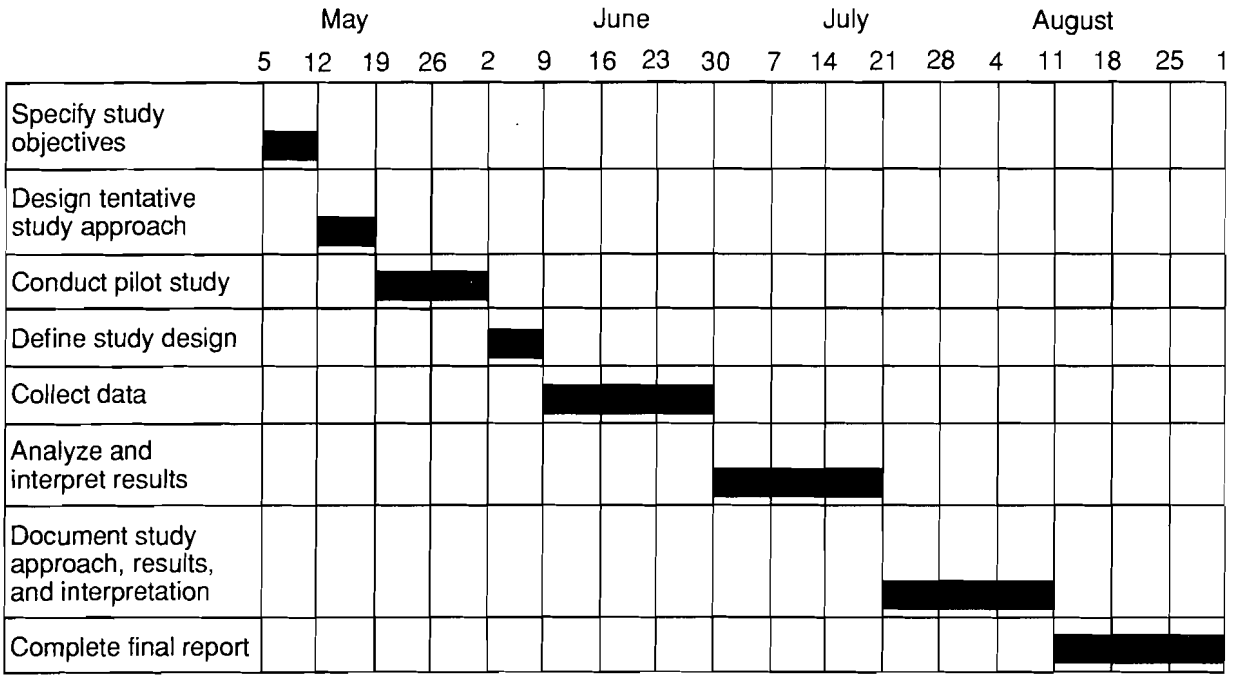

Fig. 14. Example of a Gantt chart for planning a field study.

study are listed at the left side of the chart. A rectangular bar marker designates the duration of each task; the right edge identifies the completion date, the left edge specifies the latest starting date.

Flowcharts

Originally developed to describe the logic of computer programs, flowcharts can be useful for describing any sequence of procedures or events. A flowchart provides a means of explaining a moderately complex process much more clearly than is possible in a written description. Complex systems, however, become confusing and difficult to follow. The basic elements used to create a flowchart are shown in Table 15.

The following conventions are observed to create clear diagrams (Erickson 1981):

1. Flowcharts are constructed with actions logically progressing from top to bottom.
2. All actions are clearly labeled and connected with flow lines and arrows.
3. Confusing logic and crossing flow lines are avoided.
4. Branches and loops are added as needed, using arrows or connectors to precisely indicate the logic path.
5. All logic paths begin at one start symbol and end at a stop symbol. No logic paths are left hanging.

A rough sketch is usually drawn first to define the flowchart logic. The chart may easily extend beyond one page, or it may reference predefined sequences of steps. For larger diagrams it is important to clearly label all connections so readers do not get lost. Special attention is needed to construct proper loops. All loops should begin or end with a decision or test point that provides an exit from the loop, otherwise an infinite cycle is entered. These guidelines are helpful to get started, but practice is the only way to become proficient at creating flowcharts that are well defined and easily understood. The example of a flowchart in Fig. 15 describes the choices and uses of two habitat analysis procedures (HEP—Habitat Evaluation Procedures, and IFIM—Instream Flow Incremental Methodology).

Table 15. *Basic flow chart elements. Adapted from Erickson (1981).*

Symbol	Name	Use
⬭	Terminal	Designates beginning and end
▭	Process step	Indicates any action to be taken
◇	Decision	Describes any decision, test, or logic choice
○	Connector	A label used to create loops by initiating a transfer to another point

Precedent Diagrams

Precedent diagrams are a variation of PERT (program evaluation and review technique), which was originally developed by the military in the 1950's. Precedent diagrams can be useful for describing complex scheduling programs. These diagrams illustrate the duration, timing, and relations between all tasks. Critical activities that can delay completion of the project also are identified. Complex projects require a computer program to design a precedent diagram, but many implementation programs can benefit from a simpler application of this technique.

Precedent diagrams are constructed with each box representing a distinct task or activity. These boxes are arranged chronologically, with time flowing from left to right. A project always begins at one box and all paths end at one box, with the intermediate activities placed in their logically occurring sequences. Lines and arrows are used to connect related tasks. No activity can begin until all those preceding it in the same path are completed. Lines can cross, but the sequence of activities must remain clear. Relations between the elements of a precedent diagram are illustrated in Fig. 16.

The following steps are used to construct a precedent diagram (Erickson 1981):

1. List the tasks or activities needed to complete the implementation program.
2. Determine the sequence of activities using the format shown in Table 16. List the activities involved in the first column, including lead times that are required; in the second column list the activities that immediately precede each activity; in the third column list the task that imme-

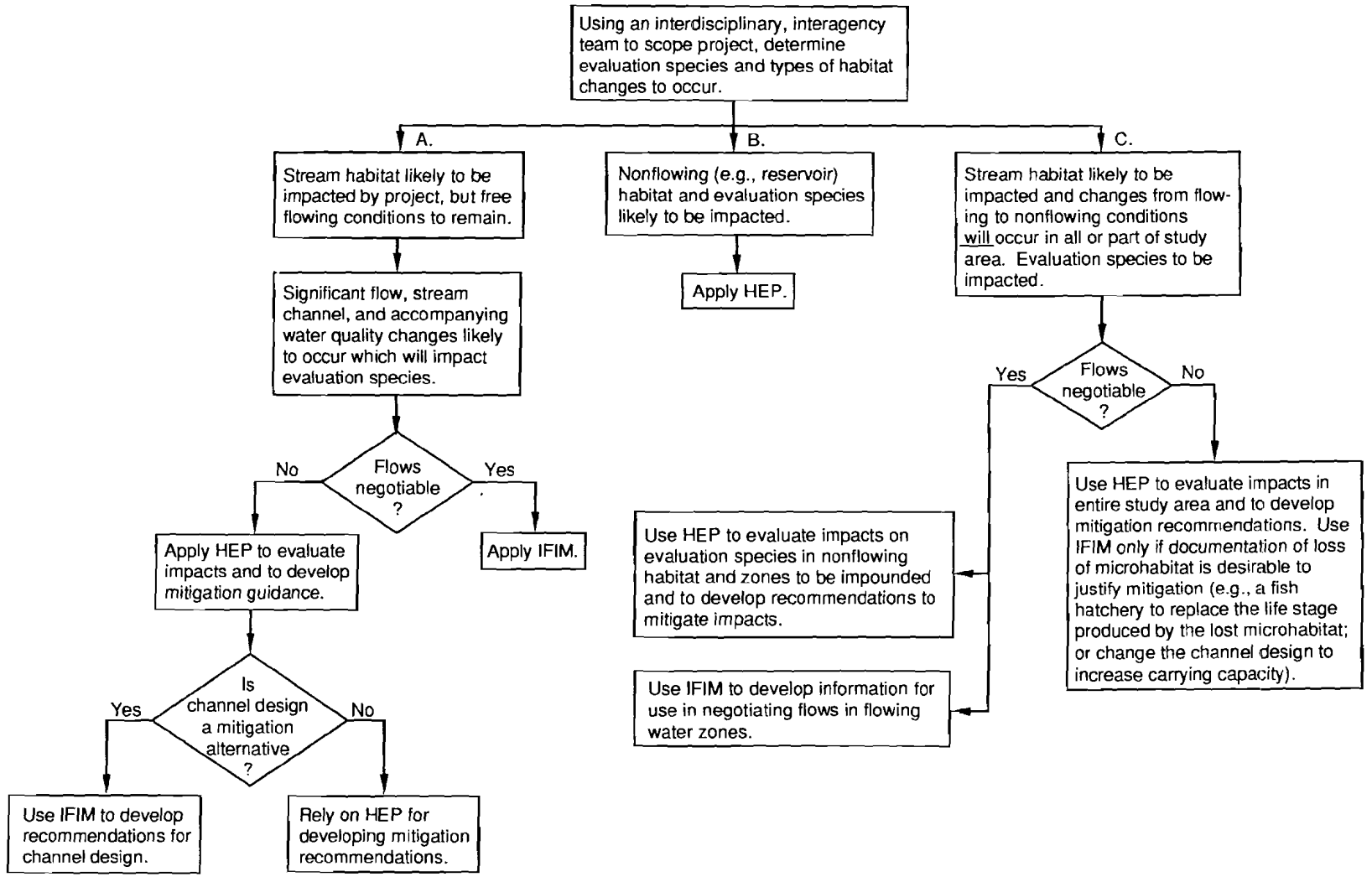

Fig. 15. Flow chart example of habitat Evaluation Procedures (HEP) and Instream Flow Incremental Methodology (IFIM). Adapted from Armour et al. (1984).

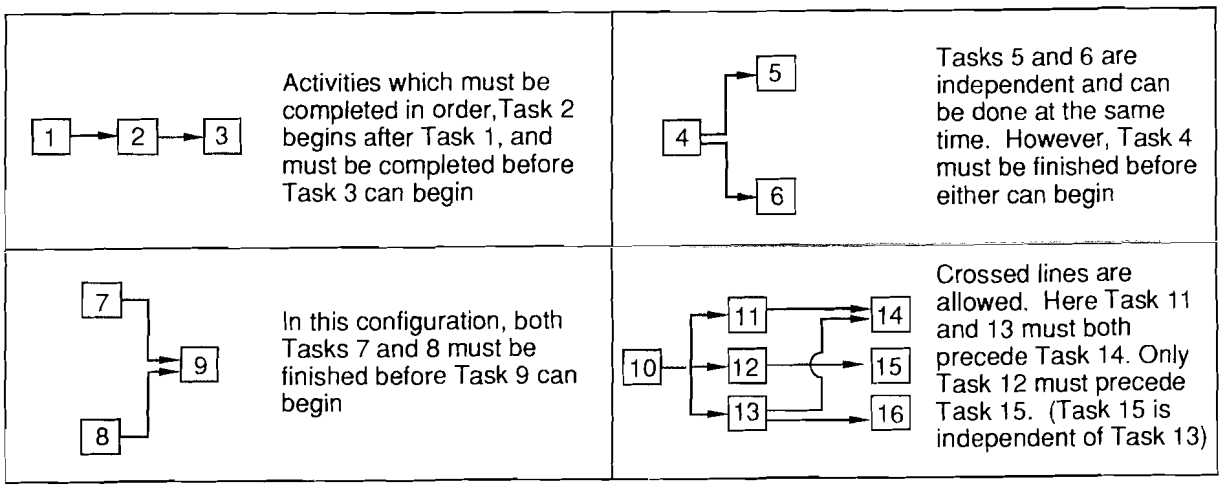

Fig. 16. Elements of a precedent diagram.

diately follows; in the last column indicate the time required to complete that task.

3. Construct the diagram. One method is to write each activity on a separate card and then arrange them into logical sequences. A period of trial and error to make additions, deletions, and other changes is usually needed to develop a meaningful chart. Copy the results in a final form.

Table 16. *List of activities for planning a workshop.*

Activity	Preceded by	Following by	Duration (days)
A. Receive workshop assignment		B,D,L	
B. Assemble steering committee	A	C	5
C. Schedule initial planning meeting	B	E	1
D. Define tentative workshop objectives	A	G	1
E. Reserve meeting location	C	F	1
F. Send out steering committee meeting announcement	E	G	1
G. Hold steering committee meeting	D,F	H	1
H. Define official workshop objectives	G	I,J	1
I. Establish workshop program	H	K,O	2
J. Designate targeted participants	H	O	1
K. Designate speakers	I	N	2
L. Designate workshop date	A	M	1
M. Reserve workshop location	L	O	1
N. Invite speakers	K	P	2
O. Send out workshop announcements	I,J,M	Q	4
P. Confirm speakers	N	R,S	2
Q. Confirm location arrangements	O	T	1
R. Revise final program as needed	P	T	1
S. Prepare workshop materials	P	T	3
T. Conduct workshop	R,S,Q	U	3
U. Prepare report, including recommendations for future actions	T		10

4. Calculate the earliest start and finish times for each task by working from left to right. The earliest finish time for the initial task is designated as 0. For the following tasks, the earliest finish time equals the earliest start plus the duration time. The earliest start time is equal to the latest of the finish times of the tasks that must precede it.
5. Identify the critical path. Working backwards from right to left, trace the path that always gives the latest finish time. Mark this path with heavy lines. Any delay in the activities in this path will delay the completion of the project.

Common errors in precedent diagrams include dangling activities, those missing either a preceding or following activity, and loops or circular sequences.

The activities involved in planning a workshop are listed in Table 16. The resulting precedent diagram is shown in Fig. 17. The earliest start, earliest finish, and durations are displayed for each task. The critical path elements are shaded. The flexibility available in the schedule can be determined by calculating the slack time for each activity. Slack time is the difference between the latest and earliest start times. The latest start time equals the latest finish minus the duration time. No slack time is available for any tasks in the critical path.

Implementation

The previously described phases of problem solving have all been aimed at preparing for a smooth and successful implementation; the problem is now well understood, a quality solution has been developed, and a clear and specific management plan has been prepared. The time has finally come to take action and implement a solution to the problem. A project manager is needed, someone ultimately responsible for overseeing the implementation activities. This person coordinates the actions of all persons and agencies involved and helps ensure that implementation is carried out according to plan.

Reassessment of the project may be needed during the implementation phase. Unforeseen problems may require a change of plans, or the problem itself may have changed or disappeared over the course of planning. Due to such changes, implementation of the management plan may no longer create the desired effect. It is important to remain open to these possibilities and be flexible while working to achieve the established goals.

Monitoring and Evaluation

This final phase of problem solving is to acquire and analyze the information needed to evaluate the results of the implemented solution. Monitoring provides feedback to resource managers so corrective changes can be made when original approaches do not work or better methods are discovered. Monitoring studies supply data to support management approaches in court or to justify the new application of a management program. Documentation of the effectiveness of the management solution is valuable whether or not the program is judged a success. Future decisions will benefit from the knowledge of what practices have succeeded or failed.

Because field measurements can seldom be verified after the fact, careful and thorough planning is crucial. To provide an accurate evaluation, the monitoring program must employ proven methods of data collection and a valid sampling design. Proper analysis and interpretation must then be applied to the data. The following steps (Fig. 18) are involved in conducting a monitoring program (Platts et al. 1987):

1. Document the baseline conditions of the site, management potential, and inhibiting factors. Specifically document preimplementation conditions in order to evaluate the changes caused by the management program.
2. Determine the management potential, or level of habitat quality that can realistically be achieved considering the use and environmental characteristics, to verify that the objectives are appropriate.
3. Design a monitoring program to determine if the objectives have been met. Test clearly stated hypotheses that track the management objectives (e.g., mean weight of fish in managed area will be greater than the mean weight in the control area by a specified amount). The variables monitored must be sensitive to management actions and measurable with estab-

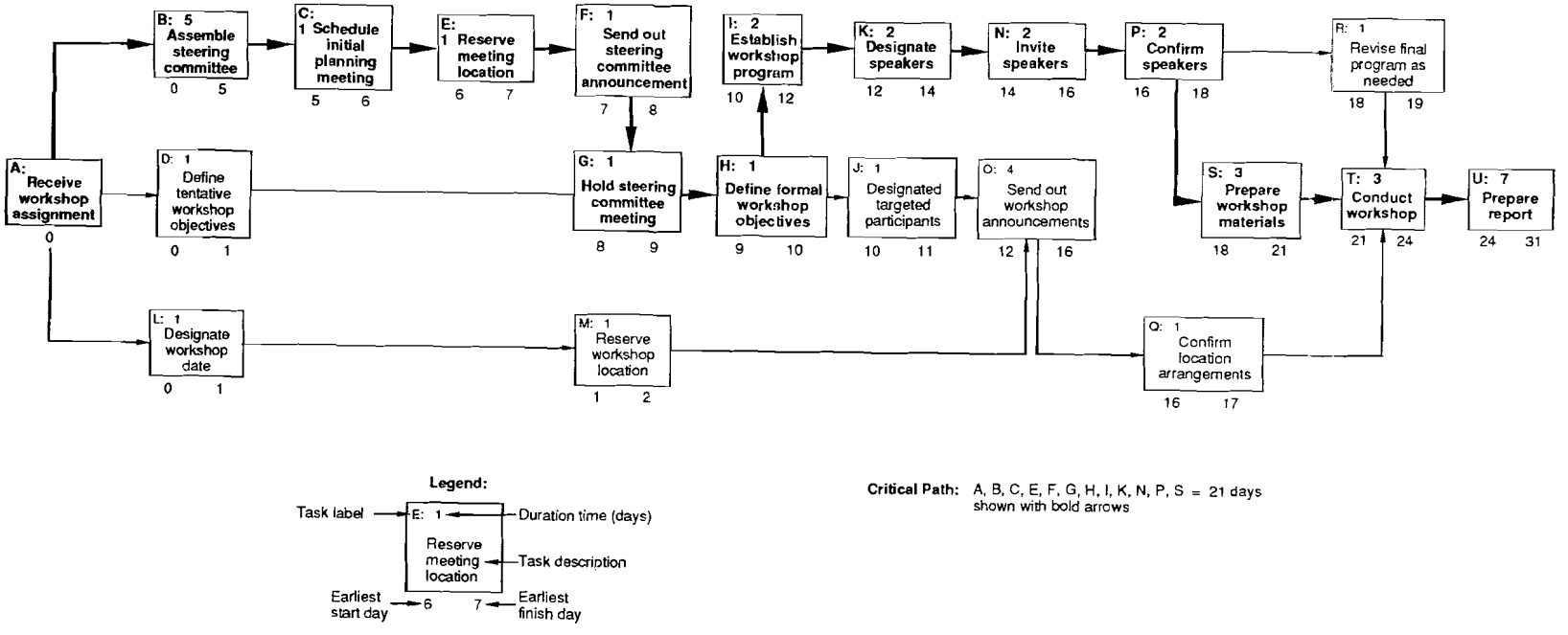

Fig. 17. Precedent diagram for planning a workshop.

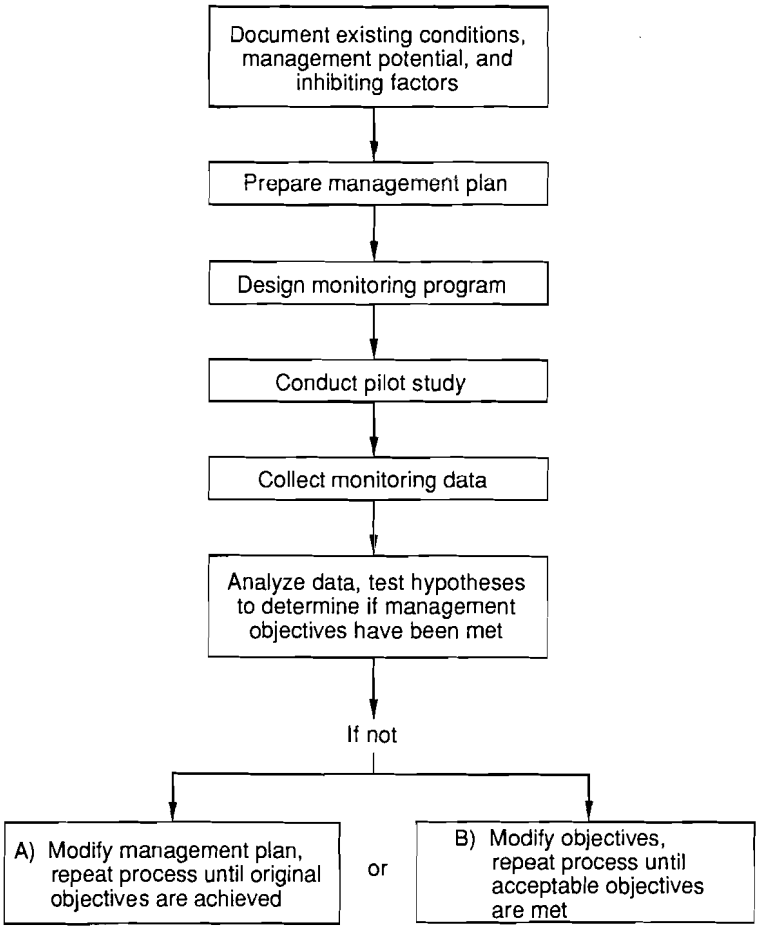

Fig. 18. Steps in a monitoring program. Adapted from Armour et al. (1983)

lished techniques to the degree of accuracy and precision required.

4. Conduct a pilot study, and modify the monitoring program as needed. This preliminary survey is used to test the feasibility of the sampling methods.
5. Implement the monitoring program and collect data. Accuracy and precision must be maintained throughout the collection of data.
6. Determine whether or not objectives have been achieved. The data are analyzed to evaluate the statistical significance of differences between the managed and control sites. Several explanations are possible if the desired change is not supported by the data: the change may not have occurred, a poor monitoring design may have caused extreme variability in the data, the sample size may have been too small, or the statistical tests used may not be sensitive enough to detect the change.
7. Modify objectives or redesign the management plan to meet original objectives if objectives are not met, and repeat the implementation and monitoring processes until they are met.

In the monitoring study, include control areas not affected by management actions so changes resulting from the management actions can be identified. These areas should have potential and preimplementation characteristics similar to those of the managed area. Apply equal effort and technical standards to monitoring the managed and control areas to avoid biased data.

Management action must remain constant over the course of a monitoring study. Any changes or modifications must be made either before or after data collection or else accurate interpretation of the information gathered may be impossible. Consistency is required at both the managed

and control sites. A common pitfall is the improvement of public fishing access to a stream during the course of a management program. Such a change makes an assessment of the effects of habitat improvement impossible. Trespassing by livestock and subsequent overgrazing of lands that causes a habitat change in a control area is another common problem.

Allow adequate time for responses to occur. Several years may be required before changes caused by management actions can be accurately determined. Unfortunately, it is rarely possible to maintain the resources necessary to carry out a monitoring program over a sufficient period of time.

Include advance planning of statistical tests when designing the monitoring program. This helps ensure that the study is designed to satisfy the assumptions and requirements of the analysis. Statistical considerations are often neglected until the data are collected, then the data available are forced into an analysis and the researcher finds out that the study was useless. The assistance of a statistician when planning the monitoring study and making modifications after the pilot test can help avoid these problems.

Unplanned events or influences also can adversely affect the results. These confounding factors can be related to institutional, equipment, personnel, or biological concerns. If not considered, these factors can confuse the conclusions regarding the success of a management program. The major institutional concern is the level of commitment in time, personnel, and funds to complete the study. Communication and cooperation with other agencies and land use managers also is essential to ensure that other activities do not interfere with the study.

Sampling biases can be introduced by the procedures or equipment used to collect data. The effect of water conditions, such as hardness and turbidity, on equipment precision also must be clearly understood and accounted for. Operation of equipment can vary over the course of the study. Equipment must be calibrated as needed. Replacement or repair of equipment during a monitoring study also can affect the consistency of the data. Use consistent methods throughout the study, and use a constant number of people to take measurements each time a method is used.

The training and experience of personnel conducting the monitoring study can affect the quality of the data. Trial runs are usually needed to familiarize personnel with the equipment and methods. The precision of sampling may vary from person to person. To avoid biases, systematically rotate individuals among the sampling sites. Individual performance may vary with the time of day or year and improve with experience over the course of the study.

Biological factors also can confound the results of a monitoring study. Analysis of variables not truly independent and natural variation in populations can mask the effects of management actions. Influences unrelated to the management program also can cause changes in the populations concerned. Consider the effects of fishing pressure on population size and distribution when planning sampling dates to help avoid these obvious problems. Although rarely accomplished, monitoring studies may need to extend for several years to allow sufficient time for accurate determination of population responses to management actions.

Special Considerations for Experts

The preceding material pertains principally to guidance for avoiding groupthink pitfalls and the presentation of group procedures for understanding and solving problems. Prior to applying the guidance and procedures, experts who participate in group processes should consider their personal responsibilities in the process.

A key responsibility of an expert is to withhold strong advocacy for solutions to complex problems prior to participating in a group analysis and consideration of ideas from others. Two other requirements are genuine receptivity to information from others, including openness to ideas for solving a problem that might be counter to conventional wisdom (e.g., it will not work because we tried it before); and a commitment to control personal biases at all times to prevent them from hampering the group thought process. One way to deal with personal biases is to ensure that information contributed to a group can be verified for accuracy. If verification is not feasible and the information stems from professional opinion and judgment,

care should be taken to make it a standard procedure to freely disclose the limitations.

Many ecological problems are so complex that it is improbable for any one individual to possess adequate knowledge and skills to understand and solve them. This exemplifies the importance of being a receptive participant to the interdisciplinary problem-solving approach. For example, a problem involving a major water diversion can require assistance from individuals representing several specialties, including hydrology, fisheries biology, recreation, sociology, economics, political science, aquatic ecology, engineering, water use law, and other fields. Furthermore, within a given field it is rare for any individual to have mastery of all its facets. For example, if a water diversion has the potential to adversely affect trout waters, a fisheries biologist specialized in warmwater fish would be ill-advised to assume technical responsibility for providing expert advice on trout.

Before deciding whether or not you are a qualified expert for participating in a problem-solving exercise, consider these three points. First, based on criteria commonly applied to evaluate qualifications (e.g., academic credentials, specialized training, experience, recognition of competence by experts in the specialty field), would respected specialists in the discipline agree that you are qualified? Second, assuming that you are qualified, do you adequately understand the environmental ramifications of the problem for resources in your area of specialization? Third, if you lack some important facet of understanding (e.g., expertise in salmonids) do you have access to experts who could supplement your skills to an acceptable level of proficiency to enable you to participate effectively in a group situation? If the answer to any of these questions is no, consider avoiding involvement in a group exercise.

An expert must accept that information inadequacies will usually exist for practically any problem. However, there must be a commitment to do the best job possible within time, funding, and other constraints. Regarding information needs for a group problem-solving exercise, take special care to ensure that resources are not wasted. Before additional information acquisitions, consider four questions. First, is additional information absolutely essential or is it in the nice to have category? Second, if additional information is essential, does information exist that could be used for the purpose in mind, although it might have limitations? Third, what are the options for obtaining the information within technical, timing, and funding constraints? Fourth, what are the legitimate risks to the decision process if the information is not obtained?

As an expert, do the best job possible in attempting to be an effective communicator. Common sense considerations include presenting information in an organized and logical context, excluding unnecessary volume and superfluous information, and emphasizing getting ideas across with maximum ease for listeners. Avoid jargon and technical terms unfamiliar to listeners, and explain the meanings when necessary. If information is presented orally, have any overheads and slides used prepared by a graphic artist. If the information is complex, make a trial run of the presentation to qualified experts outside the group to get constructive criticism useful for improving presentations. Also, for complex information presented orally, give a handout to group members for their independent evaluation. Refer to Fazio and Gilbert (1981), Goad (1982), and Pike (1989) for effective techniques for presenting visuals and engaging in interpersonal communications.

When becoming involved in evaluating environmental problems with the potential to affect fish and wildlife, a tendency is to assume that outcomes will be undesirable. There are circumstances when something that initially seems to be adverse can have potential for unexpected benefits. For one example, water temperatures below some hydroelectric dams can be manipulated. If the existing situation is a warmwater fishery, it might be possible to establish a coldwater fishery by releasing water from the appropriate depth behind the dam under a new water regulation regime. Assuming that a new regime would be imposed and the warmwater fishery lost, the challenge would be to remain open to considering positive benefits from the change. If a rare or endangered species or some other unique ecological feature would not be adversely affected, a trout fishery could be a highly desirable tradeoff—particularly if this type of fishery is scarce in the geographic area. Also, through temperature alterations it might be possible to increase growth and survival rates of an important species. To

ensure that opportunities do not go unrecognized, make it a standard practice, for each problem-solving exercise, to evaluate and then document that possibilities for unexpected benefits for existing or substitute resources were evaluated.

The chief purpose of a group exercise must be to contribute to problem solving—not to be caught up in the mechanics of a process. When a group assignment is completed, consider three questions to evaluate success. First, was something tangible accomplished? For example, did the exercise result in a better understanding of a problem and the establishment of information order from disorder? Second, could others use the information from the exercise to understand the rationale for group results? Third, was agreement reached on outcomes that the group believes will eventually contribute to solving the problem?

An important caveat for experts is not to become a champion for a favorite technique. Each time a group exercise occurs, take special care to evaluate various techniques that could be used for a particular step in the problem-solving process. Two factors to include in this evaluation are agreement on the preferred accomplishment for the step, and consideration of the suitability of techniques for successful completion of the step. The second factor must include the evaluation of strengths and weaknesses of techniques, including their adequacy for documenting the rationale for information developed by the group. Deciding which techniques to use is a problem-dependent challenge. Our recommendation is to select techniques adequate for getting the job done as easily as possible while preventing unnecessary work and an information overkill.

One important consideration is to avoid criticizing information provided by others unless specific suggestions can be made for correcting bothersome technical problems. If suggestions cannot be made, accept the information provisionally and do not launch criticism that could be interpreted as a personal attack. If information from any group member is based on professional opinion instead of empirical data, it should be a standard practice to demand that its limitations be clearly stated. Some experts routinely omit assumptions of simplified models of complex environmental phenomena; this type of omission should not be tolerated.

One pitfall to avoid is that of the expert placing too much importance on his or her information. The danger is that careful scrutiny of the information by other group members might result in it being rejected. If the expert loses face, it can be difficult to put the experience aside and function as if nothing happened. To prevent this problem, experts must accept that a key objective of the group approach is to avoid dominance by any individual. Input from each individual should be thoroughly scrutinized by the group regardless of who provided it. This approach, with emphasis on considering information solely on merit instead of its source, is designed to promote rigorous group thinking. If an expert feels that information he provided did not receive fair and objective treatment, and that this could cause the wrong decision to be made, he should file a minority report.

Many environmental problems are so complex that even under the best circumstances acceptable solutions might not be feasible. Assuming that the correct mix of qualified experts is assigned to the problem-solving exercise, individual experts should not conclude that a total failure occurs when immediate solutions are elusive. For example, if documentation is assembled to identify knowledge gaps, this can be a positive contribution. One benefit could be that the information will be available when decisions are made to designate future research and development to advance knowledge to higher stages of understanding. Therefore, the outcome can be a crucial step in the evolutionary process in problem solving.

When a group approach is taken in solving a problem, success of the outcome depends on the personal characteristics of the participants. Essential characteristics are listed in Table 17. Regarding team-playing and teamwork, Larson and LaFasto (1989) reported what must go right and what can go wrong.

Concerning other characteristics of an effective expert in group activities, advice given by King (1944) to beginning engineers is appropriate for individuals in any discipline. An important trait of experts must be to speak out and defend their ideas, as well as debate the merits of ideas of others. Individuals who resist speaking out or participating in debate will hinder group accomplishments because group success depends on unimpeded sharing and critical analysis of information.

Table 17. *Essential personal traits of an expert.*

Trait	Importance
Good listener	Part of the challenge when participating in an exercise is to ensure that all important information shared by others is heard and understood. A good listener has a better chance of assimilating important information for use in debate and other group processes. This helps ensure that all relevant information is considered in the decision process.
Team player	Emphasis is on success of the group, not individuals. A team player is motivated to assist the group achieve an acceptable outcome and not be driven by a strong need to demonstrate dominance and to seek credit. Two key traits of a good team player are dependability in completing assignments and willingness to take personal risks (e.g., provide professional opinion that might not be backed by complete documentation) to benefit group performance.
Patience	For complex problems, time is required for trial and error approaches for deciding on the best decision-making techniques to use and learning how to use them. Patience is necessary when thorough consideration must be given to evaluate complex information in attaining problem understanding and striving for solutions. Impatience without thorough analysis of information is unacceptable.
Effectiveness in groups	Some individuals are loners. They do not like to work in groups. This does not mean that they cannot solve problems, but in a group setting they are reluctant participants. For successful group functioning, an important quality must be a demonstrated ability to work smoothly with others. This includes the ability to engage, in an unthreatened manner, in exchanging and debating information while retaining mutual respect and avoiding interpersonal behavior that thwarts achievement of group goals.
Persistence and perserverance	Problem-solving exercises, especially for difficult problems, require a great deal of time and energy. Individuals who participate must agree from the outset to stay with a group until a final analysis is completed. If an expert drops out and must be replaced, valuable time can be lost in getting the new person proficient with techniques and working with an established group.
Ability to cope with uncertainty	Particularly for complex problems, there are three difficult constraints. First, the ultimate or perfect solution might not exist. Second, there might be several reasonable solutions and all will have positive and negative features to compound difficulty in determining what to do; and there will be a risk that a choice will be wrong. Third, seldom will complete information be available for everything that one would like to know before a problem can be completely understood and decisions can be made on approaches for dealing with it. To cope with the three constraints, experts must be willing to deal with uncertainty and to accept that perfection and lack of risks can be unrealistic expectations.

It is important to avoid prolonged rambling when providing information. This grating approach lessens the concentration span of others and may detract from use of the information, regardless of its importance. A good rule to follow is to express the maximum amount of information in the least amount of time and in the clearest way possible (King 1944). King recommended the newspaper approach, presenting the important facts early in the article.

Another point expressed by King (1944) applicable to working in groups is to ensure that information you give is accurate. This applies to what you provide orally or in writing. Above all else, if requested to provide information that you do not know, never hesitate to admit it—but if the subject is within your technical capabilities make it a personal trait to offer to obtain the information as quickly as possible for the group.

King (1944) also discussed "laws of character" that merit consideration by individuals involved with group exercises. He included the laws under a commitment to the Golden Rule, which is to treat others as you would have them treat you. Basically, the laws are as follows:

1. appreciate the good qualities rather than the faults of others,
2. control your impatience from insignificant shortcomings and annoyances of others,

3. do not harbor grudges when there are honest differences of opinion,
4. consider feelings and interests of others before taking action,
5. put self-motivated interests aside and stick with the merits of the work at hand,
6. help other group members to be their best, and,
7. be fair at all times.

For entry level natural resource specialists employed by government agencies, there can be misunderstanding of the role of scientific information in the decision-making process. One reason for this problem is that few individuals are required to take political science courses pertaining to the way government entities function. Some individuals are prone to believe that science and technology are the principal determinants in influencing the decision process. In fact, as the complexity of a problem and the number of stakeholders increase, the probability diminishes for a decision to be made solely on technical merits. This reality prevails because there is a plethora of factors affecting decisions including social attitudes, politics, economics, conflicting demands of different interest groups in the private and public sectors, and by no means of nominal consequence—institutional behavioral modes.

Concerning behavioral modes in the decision process, institutions seldom function as autocratic sovereigns in dealing with complex problems. This is because an agency has inherent limitations to prerogatives for action. Perceptions of the way these limitations operate are described by Lindblom (1959), a political economist. To illustrate, suppose a solution for a high level environmental problem is being sought, for example, banning air pollution. The ideal or rational comprehensive approach (Table 18), as described by Lindblom (1959), for dealing with the problem would be to perform an exhaustive analysis of the problem and alternative solutions with the latitude to do whatever is necessary to ensure that the problem will be solved. The sequence of steps would be, first, to list, then rank in decreasing order of importance, values affected by a decision to eliminate the pollution (e.g., maintain jobs, prevent unacceptable economic penalties to industry, prevent unreasonable costs to consumers, and maintain competitiveness of manufactured goods in foreign markets). Second, list all known policy options in existence, evaluating how they would affect each value, and thoroughly evaluating all known alternatives for a solution. Third, implement the alternative that would give the best the possible outcome for the ranked values.

Table 18. *Comparisons of problem-solving approaches.*

Rational comprehensive	Successive limited
Strong emphasis on meeting objectives	Objectives are stated as goals but avoidance of problems for the institution receives almost equal emphasis.
Clearly stated endpoints (objectives) are defined and a thorough job is done of defining and analyzing alternative solutions	Fewer alternatives considered and emphasis is on those within the institution's authority.
Test of a decision is that it gets the intended results	Test is that there is agreement on a policy to apply although it might not achieve objectives.
All analyses are comprehensive	Limited effort on analyses and seldom consider values other than the one for the primary concern. There is strong reliance on hunches and what the institution did in the past to deal with a similar problem.
Heavy reliance on rigorous thinking and theory	Little consideration of theory and thinking is low key.
Institutional belief that the problem will be solved	Belief from the outset that the action will fail.

All analyses would be performed with prodigious detail, and all information available in the world, including relevant theories, would be considered in minute detail. Also, all government programs would be evaluated for ways to determine what could be done to efficiently integrate efforts to get the job done. All options would be open. There would not be any sacred cows, and it would be assumed that the problem would be solved.

According to Lindblom (1959) the reality is that agencies take the successive limited comparison (Table 18) approach (incrementalism) to problem solving. The steps for the approach are simple: state a level of air pollution that would be tolerable (e.g., cut emissions by 75%); outline a few optional

approaches for the agency to take to deal with the problem while relying mainly on past experiences in dealing with this type of problem; perform a fairly low-keyed analysis, and then decide what to do; and if the action does not work, repeat the process to try to eventually achieve success.

Lindblom (1959) explained that the rational comprehensive approach does not work because all contingencies cannot be evaluated, and there is not enough time and money for complicated and exhaustive analyses. Also, a given institution does not have the latitude to do everything (e.g., ensure that all other agencies cooperate efficiently and effectively) that is necessary to implement the ideal solution.

Doerksen and Lamb (1979) described decision-making approaches of agencies in dealing with natural resource problems. The information deals with instream flow issues but seems appropriate for various natural resource problems. First, there is linkage between the interagency bargaining strategy and established processes of the agency. For example, the position on how to deal with a problem is strongly influenced by agency traditions and previous policy stands, and an agency tends to reaffirm its traditions and stands when dealing with other agencies. Second, current operating procedures of an agency play a significant role in determining how decision-making processes operate. For example, it is not merely what was done in the past but how it was done that affects the process, including information that is considered before making decisions. Third, if an agency has the resources in terms of personnel and budgets, and a well-defined mission that permits it to deal decisively with a problem, it has a better chance for a dominant role in determining the outcome for a solution to a problem. Accordingly, there is a direct relationship between the power of a agency and the likelihood that its advocated outcomes will be implemented. Additional details for institutional approaches in dealing with problems are in Simon (1965, 1976) and Kramer (1973).

Technical information might not dominate in decision processes. However, this does not mean that experts should do less than their best in providing information. Questions for experts to consider in evaluating their performance in the decision process include:

1. Given the limitations (e.g., time, money) for developing information, would other qualified experts agree that the contribution was reasonable in terms of quality and thoroughness?
2. Was the information presented in a comprehendible context to all individuals involved with the decision process?
3. Was the information presented within the specified time to appropriate individuals?
4. Regardless of the outcome for a decision concerning how to deal with a problem, given the circumstances, do experts feel comfortable in believing that they did their best?

In addition to experts doing their best in contributing to the decision process, there should be an expectation for institutional reciprocity. This includes the lack of coercion to get experts to report erroneous information, or to selectively use it to lend credibility to the rationale for institutional decisions. Finally, if institutional decisions do not go the preferred way according to perspectives of experts, how should experts react? Providing that (1) there is a good faith institutional attempt to provide the opportunity for technical material and recommendations to be considered in the decision process, (2) experts are treated in a professional manner, including being afforded the courtesy of an explanation for factors contributing to the decision, (3) there is intolerance in the institution for protective reporting (telling officials what you think they want to hear), and (4) there is no attempt to avoid disclosure of the technical information to individuals and interest groups outside the institution—the outcome should be accepted as fair play. By no means should experts consider controversial decisions as personal defeats or an adverse reflection on their professional ability or judgment—assuming that they do their best in providing information.

Acknowledgments

R. Johnson contributed greatly to the section on the nominal group technique. K. Lindgren, National Ecology Research Center librarian, provided valuable assistance, and R. Davis prepared the graphics. B. Gorman and D. Ibarra typed the final manuscript.

References

Adizes, I., and E. Turban. 1985. An innovative approach to group decisionmaking. Personnel 62(4):45–49.

Armour, C. L., K. P. Burnham, and W. S. Platts. 1983. Field methods and statistical analyses for monitoring small salmonid streams. U.S. Fish Wildl. Serv. FWS/OBS-83/33. 200 pp.

Armour, C. L., R. J. Fisher, and J. W. Terrell. 1984. Comparison of the use of the Habitat Evaluation Procedures (HEP) and the Instream Flow Incremental Methodology (IFIM) in aquatic analyses. U.S. Fish Wildl. Serv. FWS/OBS-84/11. 30 pp.

Armour, C. L., R. E. Ellison, R. L. Johnson, and S. C. Williamson. 1988. Description of the Fish and Wildlife Service's Cumulative Impacts Project. Pages 211–220 *in* J. A. Kusler, M. L. Quammen, and G. Brooks, eds. Proceedings of the national wetland symposium: mitigation of impacts and losses. Assoc. State Wetland Managers, Berne, N.Y.

Armour, C. L., and S. C. Williamson. 1988. Guidance for modeling causes and effects in environmental problem-solving. U.S. Fish Wildl. Serv. Biol. Rep. 89(4). 21 pp.

Behn, R. D., and J. W. Vaupel. 1982. Quick analysis for busy decision makers. Basic Books, New York. 415 pp.

Bell, D. E. 1977. A decision analysis of objectives for a forest pest problem. Pages 389–421 *in* D. E. Bell, R. L. Keeney, and H. Raiffa, eds. Conflicting objectives in decisions. Wiley Interscience, New York.

Briggs Myers, I. 1962. Myers–Briggs type indicator. Consulting Psychologists Press, Inc., Palo Alto, Calif. n.p.

Briggs Myers, I., and M. McCaulley. 1985. Manual: a guide for the development and use of the Myers–Briggs type indicator. Consulting Psychologists Press, Inc., Palo Alto, Calif. 309 pp.

Brightman, H. J. 1988. Group problem-solving: an improved managerial approach. Georgia State University Atlanta. 231 pp.

Committee on Environmental Decisionmaking. 1977. Decisionmaking in the Environmental Protection Agency. Natl. Acad. Sci., Washington, D.C. 249 pp.

Cooper, C. R., and M. L. Ploor. 1986. The challenges that make or break a group. Train. Develop. J. 40(4):31–33.

Crance, J. H. 1985. Delphi technique procedures used to develop habitat suitability index models and instream flow suitability curves for inland stocks of striped bass. U.S. Fish Wildl. Serv. WELUT-85/W07. 58 pp.

Crance, J. H. 1987a. Guidelines for using the Delphi technique to develop habitat suitability index curves. U.S. Fish Wildl. Serv. Biol. Rep. 82(10.134). 21 pp.

Crance, J. H. 1987b. Habitat suitability curves for paddlefish developed by the Delphi technique. N. Am. J. Fish. Manage. 7:123–130.

Crance, J. H. 1988. Results on the use of the Delphi technique for developing Category I habitat suitability criteria for redbreast sunfish. Pages 102–129 *in* K. Bovee and J. Zuboy, eds. Proc. of a workshop on the development and evaluation of habitat suitability criteria. U.S. Fish Wildl. Serv. Biol. Rep. 88(11).

Dean, J. H., and C. S. Shih. 1975. Multiattribute water resources decisionmaking. AIIE Trans. 7:408–412.

Delbecq, A. L., A. H. Van de Ven, and D. H. Gustafson. 1975. Group techniques for program planning: a guide to nominal group and Delphi processes. Scott, Foreman and Co., Glenview, Ill. 194 pp.

Doerksen, H. R., and B. L. Lamb. 1979. Managing the rippling stream: Decisionmaking in natural resource administration. Water Resour. Bull. 15(6):1707–1715.

Erickson, S. M. 1981. Management tools for everyone: twenty techniques. Petrocelli Books, New York. 170 pp.

Evans, J. R. 1986. Education: creative thinking and innovative education in the decision sciences. Decision Sci. 17:250–262.

Fazio, R. J., and D. L. Gilbert. 1981. Public relations and communications for natural resource managers. Kendall and Hunt, Dubuque, Iowa. 375 pp.

Fisher, B. A. 1980. Small group decisionmaking: communication and the group process, 2nd ed. McGraw–Hill, New York. 355 pp.

Frankel, S. 1987. NGT+MDS: an adaptation of the nominal group technique for ill-structured problems. J. Appl. Behavior. Sci. 23:543–551.

Gardiner, P. C., and W. Edwards. 1975. Public values: multi-attribute utility measurement for social decisionmaking. Pages 1–37 *in* M. F. Kaplan and S. Swarts, eds. Human judgment and decision processes. Academic Press, New York.

Goad, T. W. 1982. Delivering effective training. University Associates, San Diego, Calif. 183 pp.

Gordon, W. J. J. 1961. Synectics: the development of creative capacity. Harper & Row, New York. 180 pp.

Hall, J. 1971. Decisions, decisions, decisions. Psychol. Today 5(6):51–54, 86, 88.

Harvey, J. B. 1974. The Abilene paradox: the management of agreement. Organiz. Dynam. 3(1):63–80.

Hegedus, D. M., and R. V. Rasmussen. 1986. Task effectiveness and interaction process of a modified nominal group technique in solving an evaluation problem. J. Manage. 12:545–560.

Heirs, B. 1987. Managing a thinking team. Industry Week 235(3):109–111.

Herbert, T., and R. Estes. 1981. The role of the devil's advocate in the executive decision process. Bus. Q. 96(2):56–63.

Holling, C. S., ed. 1978. Adaptive environmental assessment and management. Wiley Interscience, New York. 377 pp.

Janis, I. L. 1972. Victims of groupthink. Houghton Mifflin Co., Boston, Mass. 276 pp.

Jung, C. 1923. Psychological types. Routledge and Kegan Paul, London. 654 pp.

Keeney, R. L. 1982. Decision analysis: an overview. Oper. Res. 30:803-838.

Keeney, R. L., and H. Raiffa. 1976. Decisions with multiple objectives: preferences and value tradeoffs. John Wiley and Son, New York. 569 pp.

Kendall, M. G. 1962. Rank correlation methods, 3rd ed. Hofner Publishing Co., New York. 199 pp.

Kepner, C., and B. Tregoe. 1965. The rational manager: a systematic approach to problem-solving and decisionmaking. McGraw-Hill, New York. 275 pp.

King, W. J. 1944. The unwritten laws of engineering. Reprinted from Mechanical Engineering. May:323-326, June:398-402, and July:459-462.

Kramer, F. A. 1973, ed. Perspectives on public bureaucracy. Winthrop Publishers, University of Massachusetts. Cambridge. 199 pp.

Larson, C. E., and F. M. J. LaFasto. 1989. Teamwork. Sage Publications, Newbury Park, Calif. 150 pp.

Lee, W. W. L. 1979. Decisions in marine mining: the role of preferences and tradeoffs. Ballinger Publishing Co., Cambridge, Mass. 211 pp.

Lindblom, C. E. 1959. The science of "muddling through". Public Adm. Rev. 19(2):79-88.

Maguire, L. A. 1986. Using decision analysis to manage endangered species populations. J. Environ. Manage. 22:345-360.

Maguire, L. A., U. S. Seal, and P. F. Brussard. 1987. Managing critically endangered species: the Sumatran rhino as a case study. Pages 141-158 *in* M. E. Soule, ed. Viable populations for conservation. Cambridge University Press, Cambridge, Mass.

Markland, R. E. 1983. Topics in management science, 2nd ed. John Wiley and Son, New York. 853 pp.

Meredith, J. R. 1984. Reconsidering the decisionmaking approach to management. Omega Int. J. Manage. Sci. 12:347-352.

Napier, R. W., and M. K. Gershenfeld. 1985. Groups: theory and experience, 3rd ed. Houghton Mifflin Co. Boston, Mass. 551 pp.

Nutt, P. C. 1984. Types of organizational decision processes. Admin. Sci. Q. 29:414-450.

Osborn, A. F. 1963. Applied imagination: principles and procedures of creative problem-solving, 3rd ed. Scribner's, New York. 417 pp.

Pike, R. W. 1989. Creative Training techniques Handbook. Lakewood Books. Minneapolis, Minn. 153 pp.

Platts, W. S., et al. 1987. Methods for evaluating riparian habitats with applications to management. U.S.D.A. For. Serv. Gen. Tech. Rep. INT-221. 177 pp.

Prince, G. M. 1970. The practice of creativity. Harper & Row, New York. 197 pp.

Raley, C. M., W. A. Hubert, and S. H. Anderson. 1988. Development of a qualitative effects model to assess external threats to the North Fork Flathead River Basin within Glacier National Park. U.S. Fish Wildl. Serv. NERC-88/19. 39 pp.

Ramakrishna, H. V., and H. J. Brightman. 1986. The fact-net model: a problem diagnosis procedure. Interfaces 16(6):86-94.

Saaty, T. L. 1982. Decisionmaking for leaders: the analytical hierarchy process for decisions in a complex world. Lifetime Learning Publishing Co., Belmont, Calif. 291 pp.

Seo, F., and M. Sakawa. 1979. An evaluation method for environmental systems planning: an alternative utility approach. Environ. Plan. 11:149-168.

Simon, H. A. 1965. Administrative decisionmaking. Public Adm. Rev. 25(1):31-37.

Simon, H. A. 1976. Administrative behavior. Third edition, Free Press, New York. 364 pp.

Tjosvold, D. 1986. Constructive controversy: a key strategy for groups. Personnel 63(4):39-44.

Ulvila, J. W., and W. D. Snider. 1980. Negotiation of international oil tanker standards: an application of multiattribute value theory. Oper. Res. 28(1):81-96.

VanGundy, A. B. 1984. Managing group creativity: a modular approach to problem-solving. American Management Association, New York. 278 pp.

Watson, C. E. 1976. The problems of problem-solving. Bus. Horizons 19(4):88-94.

Williamson, S. C., C. L. Armour, G. W. Kinser, S. L. Funderburk, and T. N. Hall. 1987. Pages 377-388 *in* Cumulative impact assessment: An application to Chesapeake Bay. Trans. 52nd N. Am. Wildl. Nat. Res. Conf.

Yetton, P., and P. C. Bottger. 1983. The relationships among group size, member ability, social decision schemes, and performance. Organ. Behav. Hum. Perf. 32:145-159.

Zaremba, A. 1988. Meetings and frustration: practical methods for structuring group sessions. Supervision 49(8):7-9.

A list of current *Resource Publications* follows.

166. Checklist of Vertebrates of the United States, the U.S. Territories, and Canada, by Richard C. Banks, Roy W. McDiarmid, and Alfred L. Garnder. 1987. 79 pp.
167. Field Guide to Wildlife Diseases. Vol. 1. General Field Procedures and Disease of Migratory Birds, by Milton Friend, Cynthia J. Laitman, and Randy Stothard Kampen. 1987. 225 pp.
168. Mourning Dove Nesting: Seasonal Patterns and Effects of September Hunting, by Paul H. Geissler, David D. Dolton, Rebecca Field, Richard A. Coon, H. Franklin Percival, Don W. Hayne, Lawrence D. Soileau, Ronnie R. George, James H. Dunks, and S. Dwight Bunnell. 1987. 33 pp.
169. Saltcedar Control for Wildlife Habitat Improvement in the Southwestern United States, by Theodore A. Kerpez and Norman S. Smith. 1987. 16 pp.
170. Pesticide Use and Toxicology in Relation to Wildlife: Organophosphorus and Carbamate Compounds, by Gregory J. Smith. 1987. 171 pp.
171. Sand and Gravel Pits as Fish and Wildlife Habitat in the Southwest, by William J. Matter and R. William Mannan. 1988. 11 pp.
172. Satellite Telemetry: A New Tool for Wildlife Research and Management, by Steven G. Fancy, Larry F. Pank, David C. Douglass, Catherine H. Curby, Gerald W. Garner, Steven C. Amstrup, and Wayne L. Regelin. 1988. 54 pp.
173. Key to Acanthocephala Reported in Waterfowl, by Malcolm E. McDonald. 1988. 45 pp.
174. Obsolete English Names of North American Birds and Their Modern Equivalents, by Richard C. Banks. 1988. 37 pp.
175. Procedures for the Analysis of Band-recovery Data and User Instructions for Program MULT, by Michael J. Conroy, James E. Hines,and Byron K. Williams. 1989. 61 pp.
176. Sago Pondweed (*Potamogeton pectinatus* L.): A Literature Review, by Harold A. Kantrud. 1990. 89 pp.
177. Field Manual for the Investigation of Fish Kills, by Fred P. Meyer and Lee A. Barclay. 1990. 120 pp.
178. Section 404 and Alterations in the Platte River Basin of Colorado, by Douglas N. Gladwin, Mary E. Jennings, James E. Roelle, and Duane A. Asherin. 1990. 19 pp.
179. Hydrology of the Middle Rio Grande From Velarde to Elephant Butte Reservoir, New Mexico, by Thomas F. Bullard and Stephen G. Wells. 1991. 56 pp.
180. Waterfowl Production on the Woodworth Station in South-central North Dakota, 1965–1981, by Kenneth F. Higgins, Leo M. Kirsch, Albert T. Klett, and Harvey W. Miller. 1992. 79 pp.
181. Trends and Management of Wolf–Livestock Conflicts in Minnesota, by Steven H. Fritts, William J. Paul, L. David Mech, and David P. Scott. 1992. 27 pp.
182. Selection of Prey by Walleyes in the Ohio Water of the Central Basin of Lake Erie, 1985–1987, by David Wolfert and Michael T. Burr. 1992. 14 pp.
183. Effects of the Lampricide 3-Trifluoromethyl- 4-Nitrophenol on the Pink Heelsplitter, by Terry D. Bills, Jeffrey J. Rach, Leif L. Marking, and George E. Howe. 1992. 7 pp.
184. Methods for Detoxifying the Lampricide 3-Tri- fluoromethyl-4-Nitrophenol in Streams, by Philip A. Gilderhus, Terry D. Bills, and David A. Johnson. 1992. 5 pp.

NOTE: Use of trade names does not imply U.S. Government endorsement of commercial products.

TAKE PRIDE

in America

U.S. DEPARTMENT OF THE INTERIOR

FISH AND WILDLIFE SERVICE

As the nation's principal conservation agency, the Department of the Interior has responsibility for most of our nationally owned public lands and natural resources. This includes fostering the wisest use of our lands and water resources, protecting our fishes and wildlife, preserving the environmental and cultural values of our national parks and historical places, and providing for the enjoyment of life through outdoor recreation. The Department assesses our energy and mineral resources and attempts to assure that their development is in the best interests of all our people. The Department also has a major responsibility for Native American reservation communities and for people who live in island territories under U.S. administration.