Techniques and Technology Note

Evaluation of Harmonic Direction-Finding Systems for Detecting Locomotor Activity

VALERIE L. BOYARSKI,[1,2] *Department of Fish, Wildlife, and Conservation Biology, Colorado State University, Fort Collins, CO 80523-1474, USA*
GORDON H. RODDA, *United States Geological Survey, Fort Collins Science Center, 2150 Centre Avenue, Building C, Fort Collins, CO 80526-8118, USA*
JULIE A. SAVIDGE, *Department of Fish, Wildlife, and Conservation Biology, Colorado State University, Fort Collins, CO 80523-1474, USA*

ABSTRACT We conducted a physical simulation experiment to test the efficacy of harmonic direction finding for remotely detecting locomotor activity in animals. The ability to remotely detect movement helps to avoid disturbing natural movement behavior. Remote detection implies that the observer can sense only a change in signal bearing. In our simulated movements, small changes in bearing (<5.7°) were routinely undetectable. Detectability improved progressively with the size of the simulated animal movement. The average (±SD) of reflector tag movements correctly detected for 5 observers was 93.9 ± 12.8% when the tag was moved ≥11.5°, most observers correctly detected tag movements ≥20.1°. Given our data, one can assess whether the technique will be effective for detecting movements at an observation distance appropriate for the study organism. We recommend that both habitat and behavior of the organism be taken into consideration when contemplating use of this technique for detecting locomotion. (JOURNAL OF WILDLIFE MANAGEMENT 71(5):1704–1707; 2007)

DOI: 10.2193/2006-396

KEY WORDS activity, detection, harmonic direction finding, locomotion.

The development of harmonic direction-finding systems over the past 30 years has transformed researchers' abilities to track small animals, particularly invertebrates. Because this technology employs passive reflector tags consrructed from minute Schottky diodes (Mascanzoni and Wallin 1986), it avoids some of the conventional radiotelemetry limitations, especially those associated wirh size and weight of transmitters. Harmonic reflector tags do not use batteries, are mostly antennas (≤13 cm long, <2 mm thick, approx. 0.004 g in our case) and, thus, could conceivably last indefinitely. The diodes used in reflector tags re-radiate a signal that is the first harmonic (approx. 1,830 MHz) of the original signal (approx. 915 MHz) emitted from the hand-held, battery-operated transceiver (Mascanzoni and Wallin 1986).

Harmonic direction-finding systems have been used to track carabid beetles (Mascanzoni and Wallin 1986, Wallin 1991, Lovei er al. 1997), snails (Lovei et al. 1997, Stringer et al. 2003), bumblebees (Osborne et al. 1999, Capaldi et al. 2000), and moths (Riley et al. 1998). Only recently have they been employed in vertebrate research, mostly with amphibians and reptiles. Harmonic direction finding has been evaluated for tracking movement of Lesueur's tree frog (*Litoria lesueuri*) in Australia (Langkilde and Alford 2002) and for studying the European tree frog (*Hyla arborea*) in terrestrial habitats (Peller et al. 2006). This technology has been used to examine the effects of coarse woody debris and pine litter depth manipularions on mole salamander (*Ambystoma talpoidum*) movement and microhabitat use in South Carolina, USA (Moselcy et al. 2004). Webb and Shine (1997) employed harmonic direction finding to track juvenile broad-headed snakes (*Hoplocephalus bungaroides*) in New South Wales, Australia, and Engelstoft et al. (1999) evaluated its use with sharp-tailed snakes (*Contia tenuis*), a small snake species.

The above vertebrate studies were conducted primarily to delineare activity areas or home ranges. The animals were located precisely by homing in on the emitted signal. Because the detection radius of typical reptile or amphibian reflector tags is fairly small (usually approx. 15 m), the primary challenge is locating the detection zone of the animal. Accordingly, rhe methodological focus of these studies was evaluation of the conditions influencing detection distance. These studies did not evaluate accuracy in detecting angular movements, because it is unimportant when locating an animal by homing (rhe animal's exact position is confirmed by close approach or visual detection).

The problem of detecting movement in disturbance-sensitive species is widespread; it constitutes a biologist's challenge akin to rhe physicisr's Heisenberg Uncertainty Principle (Heisenberg 1927). If an observer is close enough to monitor the animal's movements, the observer may be disrupting the measuremenr of the phenomenon of interest. From a hidden monitoring position the observer can record only changes in bearing, not changes in location (location is inferred by triangulating simultaneous bearings from multiple monitoring positions).

We ultimately soughr to use the harmonic direction-finding system for studying the undisturbed locomotor activity of the brown treesnake (*Boiga irregularis*). Although our srudy did not progress to the point of tracking live snakes, the behavior of brown treesnakes guided the design of our simulation srudy. Brown treesnakes ordinarily move only a few meters per hour, and their locomotor activity may be biased by closely approaching observers (within line of sight at night, when they are active). Thus, our objective was to test the efficacy of harmonic direction finding for

[1] *E-mail: vboyarski@yahoo.com*
[2] *Present address: Arizona Game and Fish Department, 2221 W. Greenway Road, Phoenix, AZ 85023, USA*

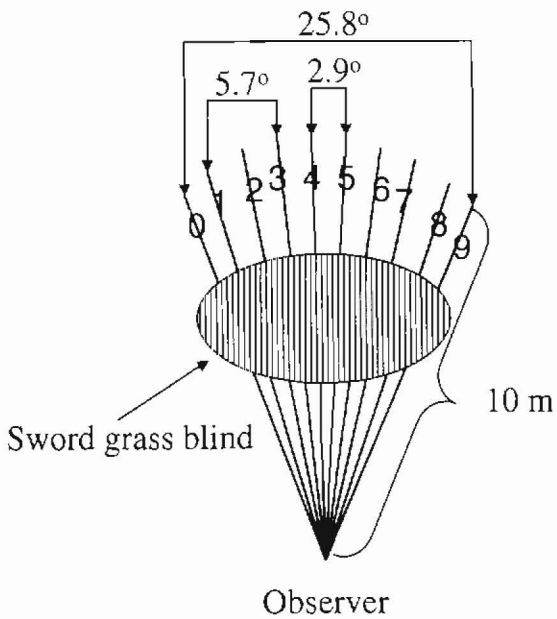

Figure 1. Diagram of field experiment conducted on Guam during July 2003 to test the efficacy of harmonic direction finding for studying undisturbed locomotor activity of animals. The observer was positioned behind a blind consisting of dense sword grass. An assistant moved the reflector tag among the numbered points (to simulate movement) based on the previously generated list of random numbers. The observer recorded whether he or she detected tag movement, and if so, the direction of the movement.

remotely detecting locomotor activity in animals by conducting a physical simulation experiment.

STUDY AREA

We conducted our study on Guam (13°30′N, 144°50′E), a forested tropical island with seasonally heavy rainfall and high humidity (National Weather Service 2004). Our study area was located in an open field near a dense patch of sword grass (*Miscanthus floridulus*) in northern Guam.

METHODS

Preliminary trials indicated that we could not detect our reflector tags from a reasonable distance (10 m) during or after rainfall (or with dew present on vegeration); water (or lipids) in the environment absorbs the signal. Furthermore, we found that tree trunks blocked the signal; thus, we conducted all trials during dry weather and in the absence of intervening woody vegetation. We also lost the signal if the tag was oriented parallel to the line of detection (Boyarski 2005). Therefore, there were many circumstances in which the detection distance was less than the limit of how close the observer could approach the subject without biasing locomotor movements. Apparently this problem was not due to our equipment; in an open field, we observed a similar maximum detection range, 83.5 ± 1.1 m (Boyarski 2005), as recorded by Englestoft et al. (1999) for similar antenna lengths.

Our harmonic reflector tags were identical to those used by Engelstoft et al. (1999). We used prefabricated tags with a 6.5-cm antenna mounted on each end of a Schottky diode (Hewlett-Packard HP5316; AtNet, Sunnyvale, CA). We fastened the tag perpendicular to a stick held vertically in front of an assistant at a height of 2 m. We selected this height to represent ideal conditions in which reflection from the ground would not present false signals. The transceiver was a RECCO8 Avalanche Rescue System (RECCO®, Lidingö, Sweden).

Our study employed 5 observers during July 2003. To evaluate the ability of observers to detect reflector tag movement, it was critical that observers remained completely blind to tag placement. Therefore, we conducted these experiments in a dense and visually opaque patch of sword grass. An observer stationed at one fixed location held the transceiver at shoulder level and moved it as desired to identify the direction of maximum reception. At a distance of 10 m and completely hidden from the observer, we established an arc of flags labeled 0–9 and spaced at 0.5-m, or 2.9°, intervals. The maximum distance between the 2 endpoints was 4.5 m, or 25.8° (Fig. 1).

While holding the tag at an optimal orientation for detection, an assistant moved the tag among flag positions according to a previously generated list of 100 random integers ranging 0–9. After recording the apparent position of the signal, an observer used a walkie-talkie to request that the assistant move the reflecror tag to the next position. The next position might be unchanged (0°) or might change as much as 25.8° (as determined by the random no. sequence). We determined whether each of 5 observers detected each of 100 movements of the tag from one reference point to a new reference point. We considered both type I (falsely estimated movement when none occurred = erroneous movement) and type II (falsely estimating immobility when movement occurred = erroneous nonmovement) qualitative errors; however, we did not identify quantitative errors. That is, if the simulated movement was 11.5° to the right and the observer judged the movement as being 8.6° to the right, we would note no error, as the observer scored only left, right, or no movement. Failure to discriminate the 2.9° difference between 8.6° and 11.5° would, however, be revealed by errors when judging simulated movements of 2.9°. We evaluated the percentage of correctly detected tag movements as a function of the angular change between reference points. We averaged the percentage of correctly detected tag movements across observers for each angular increment in series 1 and we based the standard deviations on inter-observer variability at that angular increment.

Detection was sensitive to reflector tag orientation in relation to the transceiver; we could not receive a signal when the tag antenna was parallel to line of reception. As the tag antenna orientation deviated progressively from the ideal perpendicular orientation in preliminary trials, reception degraded (the signal became weaker and less regular) and opportunities for false direction finding (bounced signals) increased. We conducted a second series of trials

to quantify efficacy in determining movements when the orientation of the reflector tag varied (within detectability limits) at sub-optimal angles. In series 2, we set tag orientation to 1 of 3 randomly assigned orientations (0°, 20°, 40°) at each of the 100 randomly assigned flag positions. In other respects the second series was identical with the first, except that series 2 occurred after series 1 and, thus, the observers had additional experience using the equipment. We did not conduct separate trials to specifically quantify accuracy at each tag orientation.

RESULTS

Because we observed no differences between series 1 and 2 ($t_7 = 1.11$, $P = 0.298$), we combined the results from both. Our experimental setup did not allow us to quantify measurement error in absolute units, but the majority of errors occurred with simulated movements of $\leq 2.9°$ (Fig. 2). Observers correctly detected movements of 5.7–8.6° about 75% of the time, and they rarely missed larger movements; average (±SD) percentage of correctly detected tag movements for all 5 observers was 93.9 ± 9.3% when we moved the reflector tag $\geq 11.5°$ in both series. On average (±SD), observers correctly detected movements 95.7 ± 11.6% of the time when we moved the reflector tag $\geq 17.2°$, and most observers correctly detected tag movements $\geq 20.1°$ (Fig. 2).

In the second series 2 confounded factors appeared: observer experience and variable tag orientation. Variable tag orientation would be expected to degrade ability to correctly detect movement, yet the percentage of correct scores at small angles was numerically but not statistically improved. Although the t-test of mean percentage correct scores paired by tag angle suggested little change in series 2, inspection of the scores indicated that the largest differences between series were associated with movements of 0–5.7°. Variance among observers was also unchanged between series ($F_{1,14} = 1.30$, $P = 0.273$). The absence of statistical degradation suggesrs that tag orientation was either relatively unimportant or that observers may have improved slightly with experience.

The transceiver provided only an auditory indication of signal strength (we estimated the animal's direction from maximal signal strength). In these trials, much of the inter-observer variability was associated with one observer whose auditory acuity was mildly diminished; therefore, observer-specific trials might be warranted when estimation of angular movements is critical.

DISCUSSION

In our simulation study, we determined that observers were unable to detect reflector tag movements with small changes in bearing ($\leq 2.9°$) but correctly detected larger movements ($\geq 20.1°$). This suggests that harmonic direction-finding techniques are better suited for measuring locomotion in species that move greater distances. Based on our experience, several limitations may limit the utility of these techniques for monitoring locomotor movements. The detection distance may not be sufficient under many

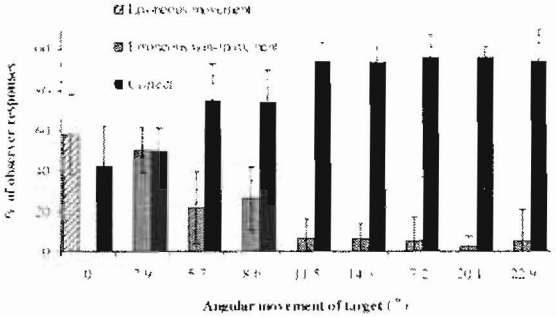

Figure 2. Observer responses in relation to reflector tag movement along an experimental arc during 2 series (one with and one without variation in orientation of reflecting antenna) of trials on Guam during July 2003. We detected no differences in responses between the 2 series; thus, we combined the results. We present the percentage of movements correctly detected with error bars showing inter-observer variation (±1 SD) in correct responses for each degree of movement. We also present the percentages of nonmovements judged to have been movements (erroneous movement) and the percentages of movements judged to have been nonmovements (erroneous nonmovements).

circumstances. Dense woody vegetation and dew or rain will absorb most signals, so densely forested or rainy environments are unfavorable. More open habitats have increased opportunities for visual disturbance but also enhanced harmonic signal transmission. Because harmonic signals can penetrate dry earth, and earth blocks opportunities for visual disturbance (allowing very close approach without disturbance), harmonic direction finding may be ideally suited for tracking shallow subterranean movements. As with all radiotelemetric tracking, movements towards or away from the receiver (parallel to the line of reception) cannot be reliably detected by a single receiver. Accurate location of the signal source is possible only if the animal is simultaneously detected from 2 stations that are more or less orthogonal to the animal's location. However, in the case of harmonic direction finding, reception will also be lost by any receiving station of which the line of reception is parallel to the reflecting antenna, which is attached to the animal and, therefore, has an orientation that is both unknown and uncontrollable. Therefore, additional monitoring positions may be required to triangulate the animal's position.

MANAGEMENT IMPLICATIONS

We conducted our trials under ideal conditions to evaluate the use of harmonic direction finding to detect angular movement. Given our data, one can assess whether the technique will be effective for movements of a specified scope at an observation distance appropriate for the study organism. Favorable conditions would include disturbance-insensitive species that move large distances relative to the system's detection distance (implying large angular changes). Harmonic direction finding is environment- and organism-specific, and we recommend that researchers take those factors into consideration when contemplating use of this novel tracking tool.

ACKNOWLEDGMENTS

Funding for this study was provided by the United States Department of Interior's Office of Insular Affairs through the United States Geological Survey Fort Collins Science Center and Colorado State University. We thank J. L. Kunna, K. L. Garrod, and C. L. Tyrrell for their participation in this experiment. We also thank A. A. Yackel-Adams, A. R. Ellingson, M. T. Christy, C. Overton, and P. F. Doherty for offering useful comments on the manuscript. G. Perry pointed out the analogy to the Heisenberg Uncertainty Principle and offered many other useful suggestions.

LITERATURE CITED

Boyarski, V. L 2005. Trappability and activity of juvenile brown treesnakes (*Boiga irregularis*) on Guam Thesis, Colorado State University, Fort Collins, USA

Capaldi, E. A., A. D Smith, J. L. Osborne, S. E. Fahrbach, S. M Farris, D R Reynolds, A. S Edwards, A. Martin, G. E. Robinson, G M. Poppy, and J. R. Riley. 2000. Ontogeny of orientation flight in the honeybee revealed by harmonic radar. Nature 403:537–540.

Engelstoft, C., K Ovaska, and N. Honkanen. 1999. The harmonic direction finder: a new method for tracking movements of small snakes. Herpetological Review 30:84–87.

Heisenberg, W. 1927. Über den anschaulichen Inhalt der quantentheoretischen Kinematik und Mechanik. Zeitschrift für Physik 43:172–198. English translation. Pages 62–82 *in* J. A. Wheeler and W. H. Zurek, editors. 1983. Quantum Theory and Measurement. Princeton University Press, Princeton, New Jersey, USA.

Langkilde, T., and R. A. Alford. 2002. The rail wags the frog: harmonic radar transponders affect movement behavior in *Litoria lesueuri*. Journal of Herpetology 36:711–715.

Lovei, G. L., I. A. N. Stringer, C. D. Devine, and M. Cartellieri 1997 Harmonic radar—a method using inexpensive tags to study invertebrate movement on land. New Zealand Journal of Ecology 21:187–193.

Mascanzoni, D., and H. Wallin. 1986. The harmonic radar: a new method of tracing insects in the field. Ecological Entomology 11:387–390.

Moseley, K. R., S B. Castleberry, and W M. Ford. 2004 Coarse woody debris and pine litter manipulation effects on movement and microhabitat use of *Ambystoma talpoideum* in a *Pinus taeda* stand. Forest Ecology and Management 191:387–396.

National Weather Service Forecast Office, Tiyan, Guam. 2004 Sep 1. National Oceanic and Atmospheric Administration website. <http://www.prh.noaa.gov/guam/normal.html>. Accessed 21 Oct 2004.

Osborne, J. L., S. J. Clark, R. J. Morris, I. H. Williams, J. R. Riley, A. D. Smith, D. R. Reynolds, and A. S. Edwards. 1999. A landscape-scale study of bumblebee foraging range and constancy, using harmonic radar. Journal of Applied Ecology 36:519–533.

Pellet, J., L. Rechsteiner, A. K. Shrivervik, J.-F. Zürcher, and N. Perrin. 2006. Use of harmonic direction finder to study the terrestrial habitats of the European tree frog (*Hyla arborea*). Amphibia-Reptilia 27:138–142.

Riley, J. R., P. Valeur, A. D. Smith, D. R Reynolds, G. M Poppy, and C. Lofstedt. 1998. Harmonic radar as a means of tracking the pheromone-finding and pheromone following flight of male moths Journal of Insect Behavior 11:287–296.

Stringer, I A. N. S M. Bassett, M J. McLean, J McCartney, and C R. Parrish. 2003. Biology and conservation of the rare New Zealand land snail *Paryphanta busbyi watti* (Mollusca, Pulmonata). Invertebrate Biology 122:241–251.

Wallin, H. 1991. Movement patterns and foraging tactics of the caterpillar hunter inhabiting alfalfa fields. Functional Ecology 5:740–749.

Webb, J. K., and R. Shine. 1997. A field study of spatial ecology and movements of a threatened snake species, *Hoplocephalus bungaroides*. Biological Conservatinn 82:203–21

Associate Editor: Perry.