The Condor 107:353–362
© The Cooper Ornithological Society 2005

POPULATION GENETIC ANALYSIS OF MOUNTAIN PLOVER USING MITOCHONDRIAL DNA SEQUENCE DATA

SARA J. OYLER-MCCANCE[1,2,3], JUDY ST. JOHN[1], FRITZ L. KNOPF[2], AND TOM W. QUINN[1]
[1]*Rocky Mountain Center for Conservation Genetics and Systematics, Department of Biological Sciences, University of Denver, Denver, CO 80208*
[2]*U.S. Geological Survey, Fort Collins Science Center, 2150 Centre Avenue Building C, Fort Collins, CO 80526-8118*

Abstract. Mountain Plover (*Charadrius montanus*) distribution and abundance have been reduced drastically in the past 30 years and the conversion of shortgrass prairie to agriculture has caused breeding populations to become geographically isolated. This, coupled with the fact that Mountain Plovers are thought to show fidelity to breeding grounds, leads to the prediction that the isolated breeding populations would be genetically distinct. This pattern, if observed, would have important management implications for a species at risk of extinction. Our study examined genetic variation at two mitochondrial regions for 20–30 individuals from each of four breeding sites. We found no evidence of significant population differentiation in the data from the control region or the ATPase 6/8 region. Nested-clade analysis revealed no relationship between haplotype phylogeny, and geography among the 47 control region haplotypes. In the ATPase 6/8 region, however, one of the two clades provided information suggesting that, historically, there has been continuous range expansion. Analysis of mismatch distributions and Tajima's D suggest that the Mountain Plover underwent a population expansion, following the Pleistocene glacial period. To explain the lack of detectable genetic differentiation among populations, despite their geographic isolation and fidelity to breeding locations, we speculate that there is sufficient female-mediated gene flow to homogenize gene pools among populations. Such gene flow might ensue if pair bonds are formed in mixed flocks on wintering grounds rather than on the summer breeding grounds.

Key words: Charadrius montanus, *gene flow, genetic diversity, mitochondrial DNA, Mountain Plover, population genetics.*

Análisis Genéticos de Poblaciones de *Charadrius montanus* Usando Secuencias de ADN Mitocondrial

Resumen. La distribución y la abundancia de *Charadrius montanus* se han reducido drásticamente desde hace 30 años y las poblaciones han quedado más aisladas geográficamente debido a la transformación de las praderas de pastos cortos a tierras agrícolas. Estos cambios, combinados con el hecho de que se cree que *C. montanus* presenta fidelidad a sus áreas de nidificación, sugieren que las poblaciones reproductivas aisladas podrían ser distintas genéticamente. De observarse este patrón, tendría consecuencias importantes para el manejo de esta especie en peligro de extinción. En nuestro estudio, investigamos el patrón de variación genética en dos regiones mitocondriales en 20–30 individuos de *C. montanus* provenientes de cuatro sitios de nidificación. No encontramos evidencia de diferencias poblacionales significativas en los datos de la región de control, ni en la región de ATPasa 6/8. Un análisis de clados anidados reveló que no hay ninguna relación entre haplotipos filogenia y geografía entre los 47 haplotipos de la región de control. Sin embargo, en la región ATPasa 6/8, uno de los dos clados proveyó información que sugiere que la especie ha aumentado históricamente su rango de distribución. Análisis de distribuciones "mismatch" y de la D de Tajima sugieren que la población se expandió después del período glacial del Pleistoceno. Para explicar la falta de diferenciación genética entre las poblaciones, a pesar de su aislamiento geográfico y de la fidelidad a sus sitios de nidificación, especulamos que el flujo de genes es controlado por las hembras de la población de tal modo que los acervos génicos son bastante homogéneos entre las poblaciones. Dicho flujo de genes podría ocurrir si se formaran las parejas en las bandadas mixtas en el invierno, no en el verano cuando están en sus áreas de nidificación.

Manuscript received 16 March 2004; accepted 17 December 2004.
[3] E-mail: sara_oyler-mccance@usgs.gov

INTRODUCTION

Historically, the breeding range of the Mountain Plover (*Charadrius montanus*) extended throughout the Great Plains and southwestern United States in shortgrass-prairie habitat dominated by herbivores such as prairie dogs (*Cynomys spp.*), bison (*Bison bison*), and pronghorn (*Antilocapra americana*). Much of the eastern part of that range no longer supports Mountain Plovers, with extinctions in South Dakota and North Dakota, and only remnant isolated populations in Kansas and Nebraska (Knopf 1996). Changes in agricultural practices, livestock and native ungulate grazing regimes, human expansion into breeding habitat, and fire suppression have led to a 60% decline in numbers over three decades during the late twentieth century (Leachman and Osmundson 1990, Knopf 1996). Further, because Mountain Plovers need large, open areas with low vegetation and bare ground, they have been positively associated with prairie dog colonies (Knowles et al. 1982, Knowles and Knowles 1984) and have suffered population declines in conjunction with the elimination of prairie dog colonies due to intentional extirpation and to disease outbreaks (Leachman and Osmundson 1990, Knopf 1996). Similarly, while Mountain Plovers once wintered across the southwestern United States, they are now primarily restricted to areas in the Central and Imperial Valleys of California where agricultural land-use practices may also have a negative impact on populations.

Male and female Mountain Plovers have been observed to maintain fidelity to the same breeding ground year after year (Graul 1973, Knopf 1996). Chicks born in a certain area are thought to return and breed there as adults (Knopf 1996), yet evidence of this is limited. While fidelity to wintering sites is unknown (Knopf 1996), if mate choice occurs on the breeding grounds, fidelity to a certain breeding location would lead to the prediction that genetic interchange among breeding sites would be low and hence genetic differentiation among sites high. Because loss and fragmentation of this species' habitat have caused remaining breeding populations to be increasingly small and isolated, gene flow is likely even further restricted and genetic drift may be further influencing genetic differentiation among populations.

To date, movement data among Mountain Plover populations has been based on banding studies that, while informative, are not comprehensive. While these studies have focused on estimating demographic parameters, they have incidentally found movements among breeding populations in Colorado, yet it is unknown whether those individuals stayed to breed (M. B. Wunder and F. L. Knopf, unpubl. data). Movement (and subsequent breeding) of even just a few individuals between populations can be enough to offset genetic drift and prevent significant genetic differentiation among populations (Lacy 1987). Here we document levels of genetic variation within populations and genetic differentiation between populations in an attempt to estimate levels of gene flow among breeding locations.

METHODS

STUDY AREA

Mountain Plover samples (blood or embryo tissue) were collected from individuals in four breeding populations. The northern plains population is in southern Phillips County in south-central Montana. The central plains population is comprised of birds nesting on the Pawnee National Grassland in Weld County, Colorado while the southern plains population spans a larger range, including Lincoln, Pueblo, and Baca Counties in Colorado, and Morton County, Kansas. The montane population is located in a discrete area (essentially a prairie basin surrounded on all sides by mountain peaks) in Park County, Colorado, at a much higher elevation 2600–3500 m (Wunder et al. 2003) than other study sites.

GENETIC ANALYSIS

Approximately 20–30 birds were sampled from each population. Only one embryo per nest was used in the study. Approximately 36% of the individuals used in the study were breeding adults. DNA was extracted from blood samples using a phenol-chloroform protocol as described by Kahn et al. (1999) and from embryos using the Wizard Genomic DNA Purification System (Promega), following the manufacturer's instructions.

We targeted two areas in the mitochondrial genome for sequencing: the hypervariable control region I and the ATPase 6/8 region. Primers were developed using sequences from several

avian species whose entire mitochondrial genome had been previously sequenced. These species included Chicken (*Gallus gallus*, accession number NC_001323), Japanese Quail (*Coturnix japonica*, accession number AP003195), Ostrich (*Struthio camelus*, accession number AF338715), Redhead (*Aythya Americana*, accession number NC 000877), Rhea (*Rhea Americana*, accession number NC 000846), Rook (*Corvus frugilegus*, accession numberY18522), and Village Indigobird (*Vidua chalybeate*, accession number NC 000880).

For the control region, DNA was amplified by Polymerase Chain Reaction (PCR) using the primers 16076H (ATCCCCATATACATACCTC TGC) and 16775L (Quinn 1992) in 25 μL reactions following Quinn (1992) using the following thermal profile: denaturation, 94°C for 40 sec; annealing, 55°C for 1:30 min; extension, 72°C for 1 min (35 cycles). PCR was used to amplify the ATPase 6/8 region using the primers 2ATP8F (GACTAGCCTTCTCACTAGTCATT CAA) and 2ATP8R (AGTGGTTGGGGTGAA GGTATAA) with a similar thermal profile except we used an annealing temperature of 60°C. Sequencing was conducted using a dye terminator cycle sequencing reaction (Beckman Coulter CEQ8000), using the above primer sets. In these instances, double-stranded PCR products were cleaned using Amicon Microcon-PCR Centrifugal Filter Devices (Millipore, Billerica, Massachusetts), following the manufacturer's instructions. The cycle sequencing and subsequent purification of the dye-labeled products was performed using the manufacturer's protocols. These samples were then run on the CEQ8000 Genetic Analysis System (Beckman Coulter, Fullerton, California).

All sequences were aligned manually and haplotypes were identified using the program GeneTool 1.0 (BioTools, Inc., Edmonton, Alberta). These haplotypes have been submitted to Genbank under accession numbers (AY794544–AY794598). We used ARLEQUIN 2.000 (Schneider et al. 1999) to estimate nucleotide diversity (π, Nei and Tajima 1983), haplotype diversity (h, Nei 1987), Tajima's D (Tajima 1989), and F_{ST}. We also investigated population structure by conducting an analysis of molecular variance (AMOVA) using ARLEQUIN as described by Excoffier et al. (1992). This program produces estimates of variance components and Φ statistics (analogous to F statistics) to reflect haplotype diversity at different hierarchical levels. We documented the variation among populations as one level and the variation among individuals in a population as a second level. The amount of sequence divergence among haplotypes was modeled using the Tamura method (Tamura 1992) because haplotypes had unequal frequencies of A, C, T, and G and because the transition to transversion ratio was much higher than 2, as is typical of mitochondrial data. We calculated pairwise population genetic distances that incorporate both the Tamura (1992) corrected sequence divergence among haplotypes and the haplotype frequencies in each population. Tests of pairwise population F_{ST} values were also completed. Further, we estimated directional levels of gene flow using the maximum-likelihood approach of Beerli and Felsenstein (1999) in the program Migrate (Beerli 1997), which is based on coalescent theory. We used the default settings in Migrate except we used a transition to transversion ratio of 5.3 (as calculated from our data) and the number of trees sampled for the short and long chains were increased to 50 000 and 500 000 respectively.

We investigated the possibility of a postglacial population expansion using a mismatch distribution of pairwise genetic differences in the programs ARLEQUIN (Schneider et al. 1999) and DnaSP (version 3.4, Rozas and Rozas 1999). DnaSP graphically compares the observed and expected distributions for populations at equilibrium and expansions using Rogers' method of moments (Rogers 1995).

We used nested-clade analysis to differentiate patterns of population history and gene flow by generating an unrooted-haplotype cladogram using the statistical parsimony software TCS (version 1.13, Clement et al. 2000). The cladogram was constructed following the algorithm of Templeton et al. (1992) with ambiguities resolved following Crandall and Templeton (1993) and Crandall et al. (1994). The resulting cladogram was then nested using procedures from Templeton et al. (1987) and input along with geographic coordinates of all populations in the software program GEODIS (version 2.2, Posada et al. 2000). Program GEODIS calculates the clade distance (D_C), nested clade distance (D_N), and the average interior distances minus the average tip distances $(I–T)_c$ and $(I–T)_n$. These four statistics were used in conjunction with the key originally provided by Templeton (1998), and sub-

sequently updated (Templeton 2004), to examine whether the observed clade structure provided information about biological processes such as restricted gene flow, allopatric fragmentation, or long-distance migration events.

RESULTS

Of the 262 base pairs sequenced from the control region, we identified 47 haplotypes among 96 individuals (Table 1). Throughout this sequence, 40 sites were variable, including 32 transitions, 6 transversions, and 2 insertions or deletions. Each population contained a high number of haplotypes ranging from 11 in the montane population to 22 in the central plains population. Three haplotypes were shared among all populations and each population also contained unique haplotypes. The high number of substitutions and haplotypes per population led to high estimates of nucleotide diversity and haplotype diversity (northern, $\pi = 0.0014$, $h = 0.97$; southern, $\pi = 0.0009$, $h = 0.93$; central, $\pi = 0.0017$, $h = 0.97$; montane, $\pi = 0.0016$, $h = 0.89$). Tajima's D was negative for all populations yet not significantly different from zero (northern, D = −1.12, $P = 0.14$; southern, D = −1.55, $P = 0.06$; central, D = −1.23, $P = 0.11$; montane, D = −0.24, $P = 0.43$).

AMOVA revealed that 97% of the variation could be explained by within-population variation as opposed to 3% explained by among-population variation. Pairwise population F_{ST} tests were not significant for any pair of populations using a Bonferroni corrected P-value of 0.08. Pairwise F_{ST} values ranged from 0.005–0.045 with an average of 0.025. Migration estimates were large, ranging from less than one migrant per generation from the central population into the montane population, to 360 individuals per generation moving from the central population into the southern population (Table 2). However, the profile-likelihood intervals surrounding these estimates are quite large, suggesting that these estimates are not very precise.

The mismatch distribution calculated among haplotypes was unimodal for each population (Fig. 1) and we found no significant differences between each population's distribution and the model of expanding population growth (Goodness-of-fit tests: northern, sum of squared deviations = 0.004, $P = 0.56$; southern, sum of squared deviations = 0.002, $P = 0.68$; central, sum of squared deviations = 0.004, $P = 0.51$;

TABLE 1. Haplotype frequencies from the control region I of mitochondrial DNA from four populations of Mountain Plovers sampled in the northern ($n = 20$), southern ($n = 27$), and central ($n = 29$) plains and a montane population ($n = 22$). Dashes indicate that the haplotype was not present in the population.

Haplotypes	Northern plains	Southern plains	Central plains	Montane
A	1	–	–	–
B	3	1	3	1
C	1	–	–	–
D	1	–	–	–
E	–	6	1	–
F	–	1	–	–
G	–	2	4	3
H	–	1	–	–
I	1	3	3	–
J	2	3	1	6
K	–	–	1	–
L	–	–	–	1
M	–	–	–	1
N	2	–	–	–
O	1	–	–	–
P	1	–	–	–
Q	1	–	–	–
R	1	3	1	2
S	1	–	–	–
T	1	–	–	–
U	1	–	–	–
V	–	1	–	–
W	–	1	–	–
X	–	1	–	1
Y	–	–	1	–
Z	–	–	1	–
AA	–	–	1	4
AB	1	–	–	–
AC	1	–	–	–
AE	–	–	1	–
AF	–	1	–	1
AG	–	–	1	–
AI	–	1	–	–
AJ	–	1	–	–
AK	–	1	–	–
AM	–	–	1	–
AN	–	–	1	–
AO	–	–	1	–
AP	–	–	1	–
AQ	–	–	1	–
AR	–	–	1	–
AS	–	–	1	–
AU	–	–	1	–
AV	–	–	1	–
AW	–	–	1	–
AX	–	–	–	1
AY	–	–	–	1
Total haplotypes	16	15	22	11

TABLE 2. Theta (Θ = 4 × effective population size × mutation rate per site per generation) and migration estimates (95% profile likelihood interval) for all pairs of Mountain Plover populations. Migration estimates in each column represent the migration estimate from each specific population into all others.

	Θ	Northern	Southern	Central	Montane
Northern plains	0.04	–	28.0 (18.3–40.5)	148.1 (124.6–174.5)	27.6 (18.0–40.1)
Southern plains	0.13	75.7 (43.0–121.6)	–	360.8 (283.5–450.9)	179.8 (126.9–245.6)
Central plains	0.21	162.1 (130.1–199.4)	84.1 (62.2–110.8)	–	175.9 (143.1–214.0)
Montane	0.02	4.3 (3.1–5.6)	1.4 (0.8–2.2)	0.1 (0.1–0.5)	–

montane, sum of squared deviations = 0.014, P = 0.24).

In the nested-clade analysis, statistical parsimony revealed one network and 28 clades nested within it (Fig. 2). The 95% plausible set of the network was comprised of 47 haplotypes and contained several ambiguous connections that were resolved using the frequency and topology criterion. We rejected the null hypothesis of no relationship between the mitochondrial haplotype genealogy and the geographic distribution of haplotypes for only one of the 28 clades in the analysis. The one significant clade was uninformative: categorized as inconclusive using the updated key by Templeton (2004).

For the ATPase 6/8 region, eight haplotypes were identified among the 120 individuals sequenced (Table 3). Of the 325 base pairs sequenced, 13 sites were variable (8 transitions and 5 transversions). Haplotype A was common and widespread; represented in 97 of 120 individuals sequenced. Haplotype C was also found in all populations. All other haplotypes were relatively rare. AMOVA revealed that nearly all the variation (97%) was attributed to within population variation rather than among population variation (3%). Pairwise population F_{ST} tests using the Tamura correction showed no significant differences among all pairwise combinations of populations.

The nested-clade analysis revealed one network with only 2 clades nested within it (Fig. 3) and the 95% plausible set of the network had no ambiguous connections and was comprised

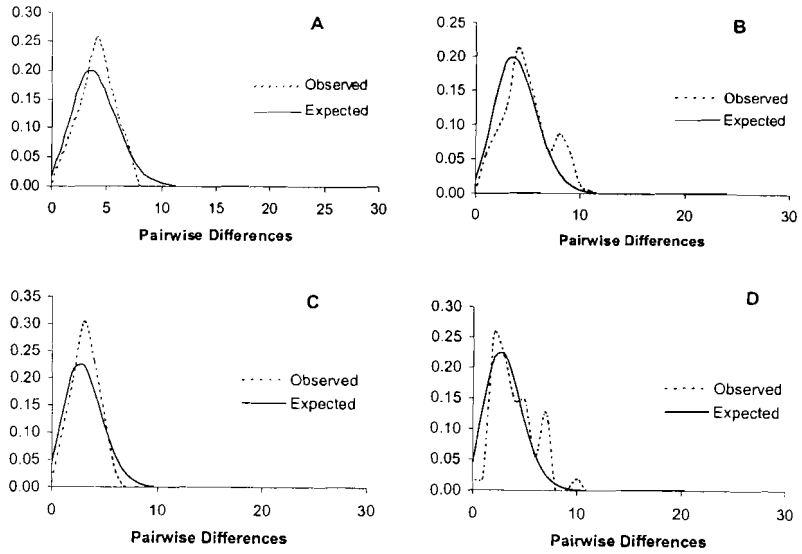

FIGURE 1. Mismatch distributions of the observed mtDNA control region haplotype variation in Mountain Plovers compared to the theoretical distribution representing population expansion for (A) the northern plains population, (B) the central plains population, (C) the southern population, and (D) the montane population.

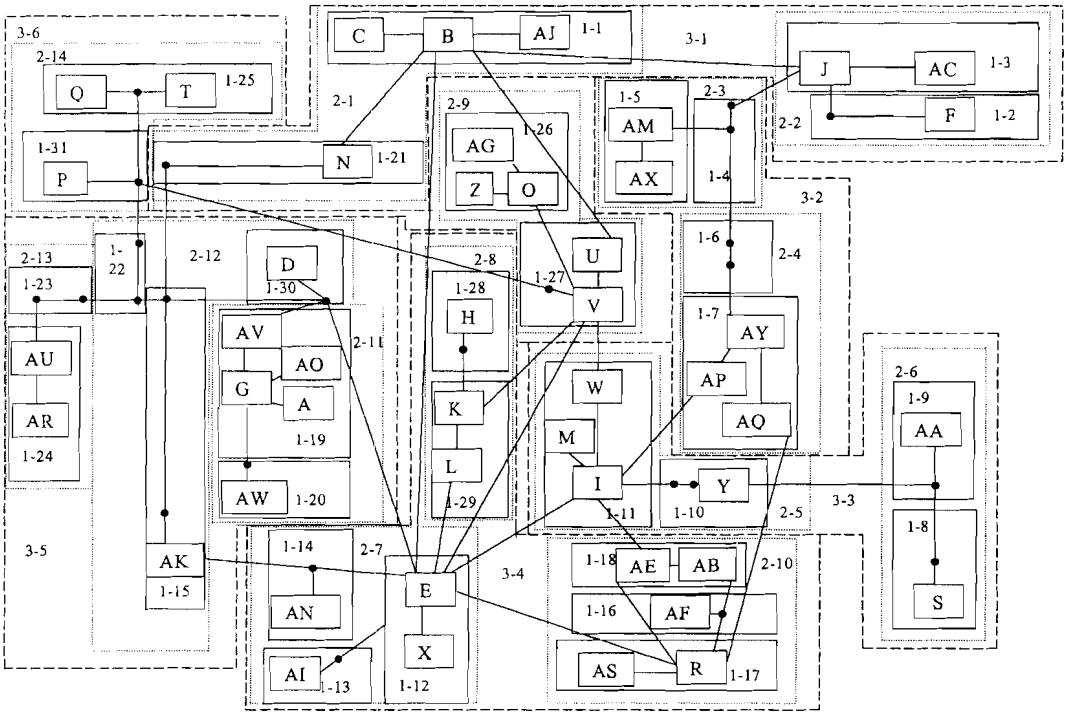

FIGURE 2. Unrooted estimated 95% parsimony cladogram of 47 haplotyopes detected in the control region of Mountain Plover. Haplotypes are represented by letters. Lines connecting haplotypes represent single mutational events, and dots represent intermediate haplotypes not found in our sample but necessary to link haplotypes that were found. Solid-lined boxes represent first-level nesting, dotted-line boxes represent second-level nesting, and dashed-line boxes represent third-level nesting. Numbers represent the level of nesting in the analysis.

of only 8 haplotypes. We rejected the null hypothesis of no relationship between the mitochondrial haplotype genealogy and the geographic distribution of haplotypes for both of the 2 clades in the analysis. One significant clade (1–1) was uninformative, categorized as inconclusive using Templeton's (2004) updated key and the other (1–2) was characterized by continuous range expansion.

DISCUSSION

Current Mountain Plover population estimates range from 5000–11 000 (U.S. Fish and Wildlife Service 2003) having declined 60% in a recent 30-year period due to significant habitat loss and fragmentation (Leachman and Osmundson 1990, Knopf 1996). In Colorado, the majority of Mountain Plovers are thought to occur in the southeastern region and in Park County (mon-

TABLE 3. Sample size (n) and haplotype frequencies from the ATPase 6/8 region of mitochondrial DNA from four sampled populations of Mountain Plovers. Dashes indicate that the haplotype was not present in the population.

		Haplotypes							
	n	A	B	C	E	F	K	K	L
Northern plains	29	23	1	1	–	–	2	–	2
Southern plains	35	30	–	2	2	–	–	1	–
Central plains	34	26	–	7	–	1	–	–	–
Montane	24	18	2	3	–	–	1	–	–

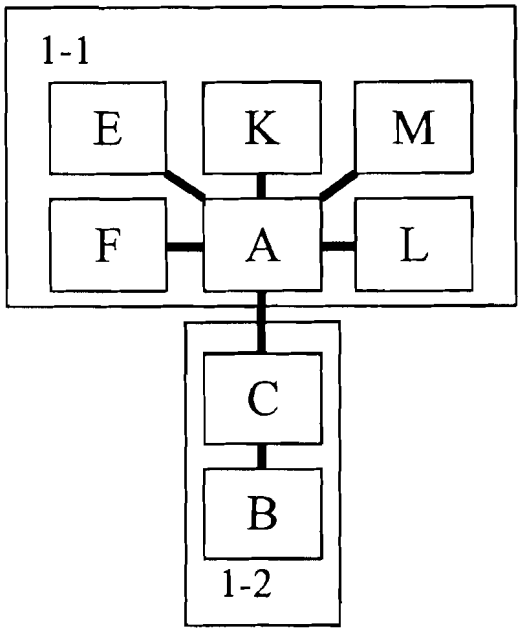

FIGURE 3. Unrooted estimated 95% parsimony cladogram of the 8 haplotypes detected in the ATPase 6/8 region of Mountain Plover. Haplotypes are represented by letters. Lines connecting haplotypes represent single mutational events. Numbers represent the level of nesting in the analysis.

tane population) with a smaller number occurring in the northeast. The Montana population of Mountain Plovers is much smaller with estimates closer to 200 individuals (U.S. Fish and Wildlife Service 2003). Isolated small populations generally suffer from decreased genetic diversity and larger influences of genetic drift (Frankham 1996). Similarly, fluctuations in population size, presumably from changes in agricultural practices and fluctuations of prairie dog colonies, would further contribute to lower genetic diversity and changes in allele frequencies due to genetic drift. Additionally, Mountain Plovers are thought to maintain fidelity to the same breeding sites (Graul 1973, Knopf 1996), further suggesting that genetic interchange among breeding sites would be low and genetic differentiation among sites high.

Our data are contrary to these expectations of highly differentiated populations with low amounts of genetic diversity. We found no significant genetic differentiation among populations and our results suggest that almost all the variability could be attributed to within-population variation. The most highly variable data (control region) showed considerable levels of variation (47 haplotypes identified over 96 individuals across 262 bp) among individual Mountain Plovers, with a high number of haplotypes per population even in smaller-sized populations. This amount of variation in the hypervariable control region I is comparable to other avian species (Wenink et al. 1993, Moum and Arnason 2001, Benedict et al. 2003, Van Den Bussche et al. 2003) yet the number of haplotypes per sampling population is higher than reported for other range-wide avian surveys (Wenink et al. 1993, Moum and Arnason 2001, Benedict et al. 2003). Further, our analysis of the control region revealed no geographical relationship of haplotype phylogenies, as has been reported in many avian species (Avise and Nelson 1989, Ball and Avise 1992, Wenink et al. 1993, Wenink et al. 1996).

The most plausible explanation for the lack of phylogeographic structure is a recent population expansion following the Pleistocene glaciation. This phenomenon has been reported for several other avian species including Marbled Murrelet (*Brachyramphus marmoratus*, Congdon et al. 2000), Great Spotted Woodpecker (*Dendrocapus major*, Zink et al. 2002), and King Eiders (*Somateria spectabilis*, Pearce et al. 2004). Our results are consistent with these studies as our haplotype phylogeny was shallow, our mismatch distribution was unimodal, and our values of Tajima's D were negative. Further, the results from our analysis of the ATPase 6/8 region revealed that one clade was characterized by continuous range expansion, again supporting the idea of a postglacial population-expansion event.

It has been argued that the Great Plains was subjected to massive ecological perturbation associated with the Pleistocene, resulting in many extinction events (Mengel 1970). A comparison of species compositions across North America has suggested that the avifauna associated with the Great Plains is small (in the number of species) and relatively undifferentiated morphologically (Mengel 1970). It is reasonable to believe that the Mountain Plover underwent a significant bottleneck during the Pleistocene as glaciation geographically reduced, or shifted, the grassland habitat. Following this period, it appears that Mountain Plover populations expanded in concert with the expanding grasslands.

From a conservation standpoint, our data show that no single population was genetically unique, suggesting that populations have not been genetically isolated from each other for a significant amount of time. Thus from a genetic perspective, no one population, in and of itself, deserves preferential protection. The very recent history of the Mountain Plover shows pronounced population declines and habitat loss. Given that the relatively small populations in this study have maintained comparable levels of mitochondrial genetic diversity and have showed no impact from genetic drift, we speculate that levels of female gene flow remain high enough to mediate these factors. Our pairwise population F_{ST} values and estimates of migration rates both support this assertion. These estimates of current movement among breeding locations are consistent with observations from banding studies which report movements among breeding sites in subsequent seasons, yet it is unknown whether those individuals remained to breed (M. B. Wunder and F. L. Knopf, unpubl. data). Thus, even though adult Mountain Plovers are thought to have strong site fidelity to breeding areas (Graul 1973, Knopf 1996), there appears to be sufficient female-mediated gene flow among sampled populations to negate the factors associated with small population size, genetic drift, and breeding fidelity that lead to population differentiation.

Gene flow could occur by adult females changing breeding locations in subsequent years. The populations sampled in this study, however, are quite distant geographically making this possibility unlikely given previous field observations regarding breeding site fidelity. Alternatively, juvenile females could be establishing breeding grounds in places other than their natal areas, possibly a result of pair bonding on the wintering grounds or during migration. Other studies of migratory birds have shown that pairs can form during spring migration or on the wintering grounds (Cooke et al. 1975) and Mountain Plovers, from across the breeding range, have been observed intermixing on wintering grounds (M. B. Wunder and F. L. Knopf, unpubl. data); thus, possibly helping to explain the lack of genetic variation among populations.

In summary, mismatch analysis suggests that postglacial population expansion has resulted in a historical increase in genetic diversity, which likely produced a homogeneous, panmictic group of Mountain Plovers. Recent biological stresses, such as population declines and habitat loss, coupled with site fidelity to breeding areas would predict population differentiation or loss of genetic diversity in small populations. Our findings indicate that even small Mountain Plover populations (particularly in the northern plains) do not exhibit reduced variability or subdivision that is typically associated with genetic drift. This leads us to speculate that there is likely some amount of female-mediated gene flow to offset such effects. Because mtDNA is maternally inherited, we cannot address whether males are also moving in similar ways. More information from banding studies, stable-isotope analysis, and nuclear genetic data are currently being collected and will help clarify this issue.

ACKNOWLEDGMENTS

Funding for this study came from the U.S. Fish and Wildlife Service, U.S. Army (Fort Carson and Pueblo Chemical Depot), the Bureau of Land Management, and the U.S. Geological Survey. The University of Denver supported this research through cost sharing. We thank Mike Wunder, Steve Dinsmore, and Bill Iko for sample collection and valuable discussion, and Bruce Rosenlund for logistical support.

LITERATURE CITED

AVISE, J. C., AND W. S. NELSON. 1989. Molecular genetic relationships of the extinct Dusky Seaside Sparrow. Science 243:646–648.

BALL, R. M., AND J. C. AVISE. 1992. Mitochondrial DNA phylogeographic differentiation among avian populations and the evolutionary significance of subspecies. Auk 109:626–636.

BEERLI, P. [online] 1997. Migrate 0.7: documentation and program <http://evolution.genetics.washington.edu/lamarc.html> (28 January 2005).

BEERLI, P., AND J. FELSENSTEIN. 1999. Maximum likelihood estimation of migration rates and effective population umbers in two populations using a coalescent approach. Genetics 152:763–773.

BENEDICT, N. G., S. J. OYLER-MCCANCE, S. E. TAYLOR, C. E. BRAUN, AND T. W. QUINN. 2003. Evalutation of the Eastern (*Centrocercus urophasianus urophasianus*) and Western (*Cenrrocercus urophasianus phaios*) subspecies of Sage-Grouse using mitochondrial control region sequence data. Conservation Genetics 4:301–310.

CLEMENT, M., D. POSADA, AND K. A. CRANDALL. 2000. TCS: a computer program to estimate gene genealogies. Molecular Ecology 9:1657–1660.

CRANDALL, K. A., AND A. R. TEMPLETON. 1993. Empirical tests of some predictions from coalescent theory with applications to intraspecific phylogeny reconstruction. Genetics 134:959–969.

CRANDALL, K. A., A. R. TEMPLETON, AND C. F. SING. 1994. Intraspecific phylogenetics, problems and

solutions, p. 273–297. *In* R. W. L. Scotland, D. J. Siebert, and D. M Williams [EDS.], Phylogeny Reconstruction. Clarendon, Oxford.

CONGDON, B. C., J. F. PIATT, K. MARTIN, AND V. L. FRIESEN. 2000. Mechanisms of population differentiation in Marbled Murrelets: historical versus contemporary processes. Evolution 54:974–986.

COOKE, F., C. D. MACINNES, AND J. P. PREVETT. 1975. Gene flow between breeding populations of Lesser Snow Geese. Auk 92:493–510.

EXCOFFIER, L., P. E. SMOUSE, AND J. M. QUATTRO. 1992. Analysis of molecular variance inferred from metric distances among DNA haplotypes: application to human mitochondrial DNA restriction data. Genetics 131:479–491.

FRANKHAM, R. 1996. Relationship of genetic variation to population size in wildlife. Conservation Biology 10:1500–1508.

GRAUL, W. D. 1973. Breeding adaptations of the Mountain Plover (*Charadrius montanus*). Ph.D. dissertation, University of Minnesota, St. Paul, MN.

KAHN, N. W., C. BRAUN, J. YOUNG, S. WOOD, D. MATA, AND T. W. QUINN. 1999. Molecular analysis of genetic variation among large- and small-bodied Sage Grouse using mitochondrial control-region sequences. Auk 116:819–824.

KNOPF, F. L. 1996. Mountain Plover (*Charadrius montanus*), p. 1–16. *In* A. Poole and F. Gill [EDS.], The birds of North America, No. 211. The Academy of Natural Sciences, Philadelphia, PA, and the American Ornithologists' Union, Washington, DC.

KNOWLES, C. J., C. J. STONER, AND S. P. GIEB. 1982. Selective use of black-tailed prairie dog towns by Mountain Plovers. Condor 84:71–74.

KNOWLES, C. J., AND P. R. KNOWLES. 1984. Additional records of Mountain Plovers using prairie dog towns in Montana. Prairie Naturalist 16:183–186.

LACY, R. L. 1987. Loss of genetic diversity from managed populations: Interacting effects of drift, mutation, immigration, selection, and population subdivision. Conservation Biology 1:143–158.

LEACHMAN, B., AND B. OSMUNDSON. 1990. Status of the Mountain Plover-a literature review. US Fish and Wildlife Service, Special Publication, Fish and Wildlife Enhancement, Golden, CO.

MENGEL, R. M. 1970. The North American central plains as an isolating agent in bird speciation, p. 280–340. *In* W. Dort and J. K. Jones [EDS.], Pleistocene and Recent Environments of the Central Great Plains. Lawrence, KS.

MOUM, T., AND E. ARNASON. 2001. Genetic diversity and population history of two related seabird species based on mitochondrial DNA control region sequences. Molecular Ecology 10:2463–2478.

NEI, M., AND F. TAJIMA. 1983. Maximum likelihood estimation of the number of nucleotide substitutions from restriction site data. Genetics 105:207–217.

NEI, M. 1987. Molecular evolutionary genetics. Columbia University Press, New York.

PEARCE, J. M., S. L. TALBOT, B. J. PIERSON, M. R. PETERSON, K. T. SCRIBNER, D. L. DICKSON, AND A. MOSBECH. 2004. Lack of spatial genetic structure among nesting and wintering King Eiders. Condor 106:229–240.

POSADA, D., K. A. CRANDALL, AND A. R. TEMPLETON. 2000. GeoDis: a program for the cladistic nested analysis of the geographical distribution of genetic haplotypes. Molecular Ecology 9:487–488.

QUINN, T. W. 1992. The genetic legacy of mother goose: phylogeographic patterns of Lesser Snow Goose *Chen caerulescens caerulescens* maternal lineages. Molecular Ecology 1:105–117.

ROGERS, A. R. 1995. Genetic evidence for a Pleistocene population explosion. Evolution 49:608–615.

ROZAS, J., AND R. ROZAS. 1999. DNASP version 3: an integrated program for molecular population genetics and molecular evolution analysis. Bioinformatics 15:174–175.

SCHNEIDER, S., D. ROESSLI, AND L. EXCOFFIER. 1999. ARLEQUIN: a software for population genetics data analysis, Version 2.0. Department of Anthropology, University of Geneva, Geneva.

TAJIMA, F. 1989. The amount of DNA polymorphism maintained in a finite population when the neutral mutation rate varies among sites. Genetics 143: 1457–1465.

TAMURA, K. 1992. Estimation of the number of nucleotide substitutions when there are strong transition-transversion and G + C-content biases. Molecular Biology and Evolution 9:678–867.

TEMPLETON, A. R., E. BOERWINKLE, AND C. F. SING. 1987. A cladistic analysis of phenotypic associations with haplotypes inferred from restriction endonuclease mapping. I. Basic theory and an analysis of alcohol dehydrogenase activity in Drosophila. Genetics 117:343–361.

TEMPLETON, A. R., K. A. CRANDALL, AND C. F. SING. 1992. A cladistic analysis of phenotypic associations with haplotypes inferred form restriction endonuclease mapping and DNA sequence data. III. Cladogram estimation. Genetics 132:619–633.

TEMPLETON, A. R. 1998. Nested clade analyses of phylogeographic data: testing hypotheses about gene flow and population history. Molecular Ecology 7:381–397.

TEMPLETON, A. R. 2004. Statistical phylogeography: methods of evaluating and minimizing inference errors. Molecular Ecology 13:789–809.

U. S. FISH AND WILDLIFE SERVICE. 2003. Endangered and threatened wildlife and plants: withdraw of the proposed rule to list the Mountain Plover as threatened. Federal Register 68:53083–53101.

VAN DEN BUSSCHE, R. A., S. R. HOOFER, D. A. WIEDENFELD, D. H. WOLFE, AND S. K. SHERROD. 2003. Genetic variation within and among fragmented populations of Lesser Prairie-Chickens (*Tympanuchus pallidicinctus*). Molecular Ecology 3:675–684.

WENINK, P. W., A. J. BAKER, AND M. G. J. TILANUS. 1993. Hypervariable-control-region sequences reveal global population structuring in a long-distance migrant shorebird, the Dunlin (*Calidris al-*

pina). Proceedings of the National Academy of Science 90:94–98.

WENINK, P. W., A. J. BAKER, AND M. G. J. TILANUS. 1996. Mitochondrial control region sequences in two shorebird species, the Turnstone and the Dunlin, and their utility in population genetic studies. Molecular Biology and Evolution 11:22–31.

WUNDER, M. B., F. L. KNOPF, AND C. A. PAGE. 2003. The high elevation population of Mountain Plovers in Colorado. Condor 105:654–662.

ZINK, R. M., S. V. DROVETSKI, AND S. ROHWER. 2002. Phylogenetic patterns in the Great Spotted Woodpecker *Dendrocopos major* across Eurasia. Journal of Avian Biology 33:175–178.